
YAZDSTEEL
RAIL AND FASTENING SYSTEMS

YAZD STEEL

RAIL AND FASTENING SYSTEMS

بازدید وزیر محترم وقت راه و ترابری
"مرحوم دکتر بهبهانی" از غرفه یزد استیل
نمایشگاه بین المللی حمل و نقل ریلی
آبان ۱۳۸۸

پیشگفتار

امروزه به موازات رشد پرشتاب صنعت، دانش و تکنولوژی، نصب خطوط ریل های جرثقیلی نیز، دچار تغییرات اساسی گردیده است، به نحوی که وابستگی صنایع به این نوع تجهیزات غیر قابل انکار بوده و دستورالعمل هایی در جهان برای چگونگی طراحی و نصب آن ها تدوین شده است ، ولی علیرغم تقاضای بالا هیچ استاندارد ملی و دستورالعمل خاصی جهت آشنایی و سفارش این تجهیزات و اطلاع از حساسیت های انتخاب آنها متناسب با شرایط مورد انتظار بهره برداری وجود ندارد.

بعضاً کارفرمایان و سازندگان محترم به علت عدم آشنایی کافی اقدام به سفارش تجهیزاتی می کنند که عدم تناسب آن ها با شرایط موجود، منجر به تحمیل هزینه هایی مانند توقف تولید، تعمیرات پی در پی و ... به کارفرمایان گردیده است و پیش بینی مالی سازندگان مخدوش میگردد ، از این رو کارشناسان شرکت یزداستیل در راستای مشتری مداری با بهره گیری از سال ها تحقیق و تجربه تمام تلاش خود را به کار خواهند گرفت تا با ارائه مشاوره تخصصی در انتخاب ریل و ملزومات نصب آن بهترین گزینه را پیش روی خریداران محترم قرار دهند.

این مجموعه جهت سهولت دسترسی مشتریان محترم به مشخصات فنی و نقشه های مقاطع ریلی و انواع پد های لاستیکی و کلمپ های رایج در نصب ریل های جرثقیلی و مقدمه ای درباره شیوه های آماده سازی سطوح و پوشش های رنگی در محیط های مختلف، اقدام به تدوین و انتشار این کتاب نموده و به صنعت گران محترم تقدیم می گردد.

درباره ما

شرکت یزد استیل تجارت مانا فعالیت خود را در سال ۱۳۷۴ تحت عنوان بازرگانی یزداستیل با مرکزیت بازار آهن تهران در زمینه خرید و فروش تمامی مقاطع فولادی آغاز نمود. سپس با مطالعه دقیق نیاز های بازار و شناخت حفره هایی که در تامین مقاطع فولادی وجود داشت تمرکز خود را روی ریل های فولادی و متعلقات نصب آن قرارداد و درکنار واردات ریل ازکشورهای اروپایی، سنگ بنای تولید انواع کلمپ و پد های مغزی فولادی را در سال ۱۳۸۶ گذاشت.

در همان سال اولین محصول شرکت با برند YZDSTL روانه بازار شد و به تدریج پد های لاستیکی و انواع فیش پلیت ها را طراحی و به مرحله تولید رساند و در سال ۱۳۹۹ با ثبت شرکت یزداستل تجارت مانا ماهیت حقوقی به خود گرفت.

در حال حاضر این شرکت با افتخار بیش از یکصد نوع کلمپ و ده ها تیپ از انواع پد های لاستیکی را تولید و روانه بازار می کند.

این شرکت همواره انتقادات و پیشنهادات کاربران محترم این صنعت را غنیمت شمرده و از آنها در جهت ارتقای کیفی محصولات خود بهره خواهد برد.

content index

Content	Page
01 Welding method & Rail Specification مشخصات ریل ها و متدهای جوشکاری	8
02 Rail Fixing (Clips or Clamps) پابند ها یا گیره های ریلی	16
03 Rail Rubber Pads (MK2 , MK6) پد های لاستیکی مخصوص ریل	86
04 Rail Standards استاندارد ریل ها	94
05 Rail Specification & Rail Drawings مشخصات و نقشه های ریل ها	116
06 Drawing & Compare مقایسه نقشه ها	130
07 Rail Welding Reference مرجع جوشکاری ریل ها	146
08 Welding Longitudinal Rails Instruction دستورالعمل جوشکاری ریل های طولی	156

01

Welding & Rail Specification

مشخصات ریل ها و متدهای جوشکاری

Tel: +98 21 66 69 5000
Fax: +98 21 66 62 9067
www.yazdsteel.com
info@yazdsteel.com

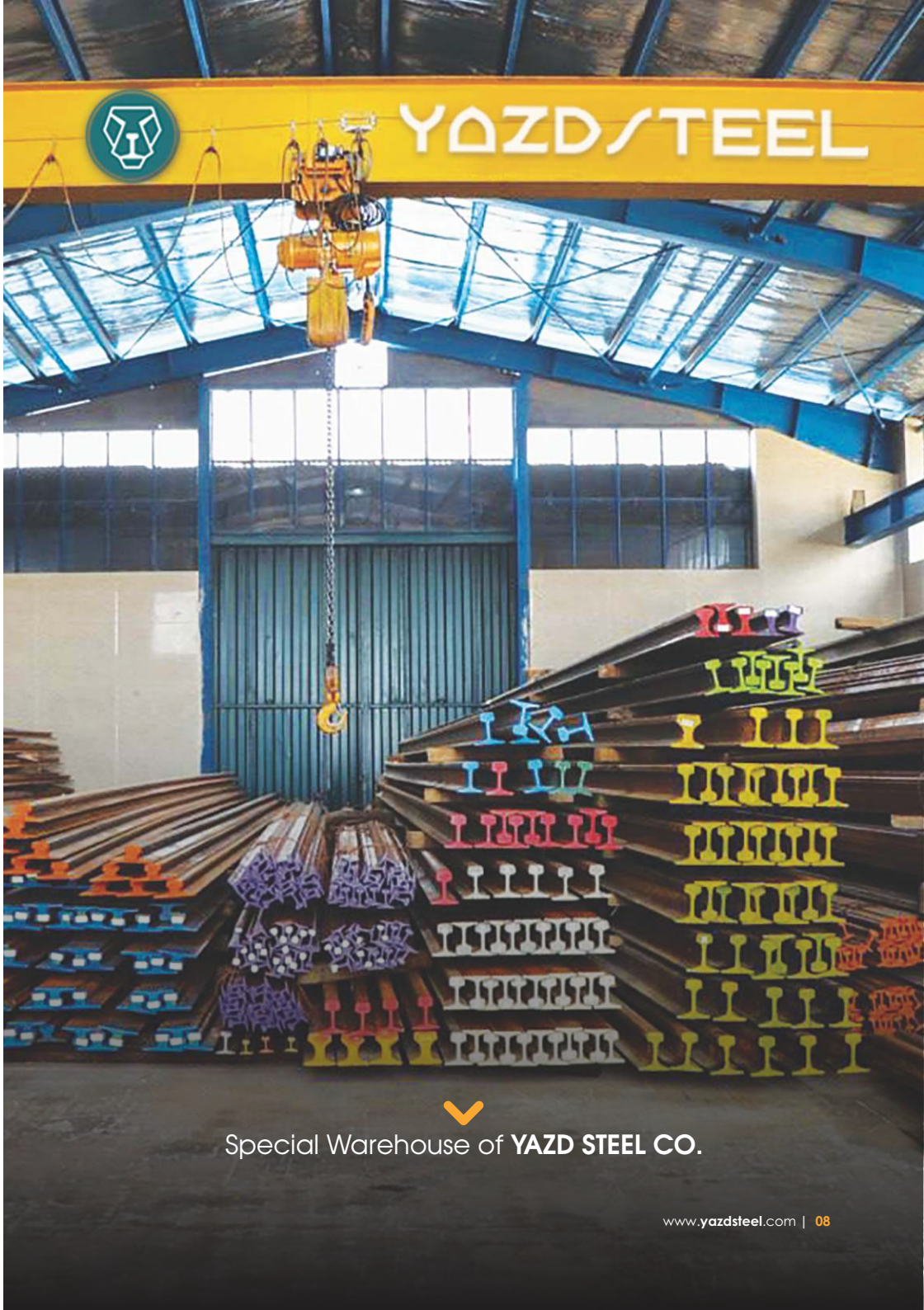

Special Warehouse of **YAZD STEEL CO.**

مختصری در مورد انواع ریل و کاربرد آن :

ریل های مورد استفاده در سیستم های حمل و نقل از لحاظ شکل فیزیکی ، ابعاد ، جنس و مقاومت در برابر بارها و فشارهای وارده متفاوت می باشند، بنابراین انواع آن را به لحاظ شکل فیزیکی می توان به شرح ذیل نام برد :

۱- ریل های راه آهن (Rail Road): در تیپ های UIC (50,54,60) , U33

۲- ریل های جرثقیلی (Crane Rail) : در تیپ های MRS , CR , QU , A ,KP

۳- ریل های معدنی (Mine Rail) : در تیپ های JIS , S , R

ریل هایی که در سیستم های حمل و نقل و مترو و جرثقیل ها مورد استفاده قرار می گیرد ، به لحاظ شکل فیزیکی شبیه به هم بوده، اما از لحاظ ابعاد شامل اندازه کف ، ارتفاع ، جان ، تاج و قوس های تاج ریل با هم تفاوت دارند، همچنین ساختار آلیاژ مصرفی آنها بر حسب میزان تحمل بار متفاوت می باشد .

به عنوان نمونه کاربرد چند ریل متداول به شرح ذیل می باشد:

۱- ریل UIC60 : برای مصرف در پروژه های راه آهن سبک بین شهری یا مترو و در بخش صنعت جهت خطوط انتقال مواد به کار گرفته می شود .

۲- ریل S54 : برای مصرف در پروژه های مترو .

۳- ریل S49 : برای مصرف در پروژه های قطار سبک شهری و خطوط انتقال ترانسفورماتور.

۴- ریل های تیپ A , QU , CR , MRS در خطوط جرثقیل ،ریکلایمرها و استکرها کاربرد دارد.

۵- ریل های تیپ S14 , S18 , S20 عموما در پروژه های سیمانی و در خطوط باند آموند استفاده می گردد.

۶- ریل های تیپ S30, R33,R38 در پروژه های حفر تونل جهت حرکت دستگاه TBM کاربرد دارد.

معرفی برخی علائم متداول :

تیپ UIC : به معنای اتحادیه بین المللی راه آهن ها و عدد بعد از آن وزن تقریبی یک متر از آن ریل بر حسب کیلوگرم می باشد.

تیپ MRS , JIS ,R , S : که عدد بعد از این علائم ، به معنای وزن تقریبی یک متر طول از آن ریل ، بر حسب کیلوگرم می باشد .

تیپ QU , A , KP : در این سه مورد ، عدد بعد از این علائم ، نشان دهنده اندازه عرض تاج ریل بر حسب میلیمتر می باشد.

تیپ CR : در این استاندارد عدد بعد از CR به معنای وزن هر یارد بر حسب پوند می باشد.

اتصال ریل ها به روش جوشکاری:

ریل ها به روش های مختلف ، نظیر جوشکاری قوس الکتریکی ، آلوترمیت و در برخی موارد به روش فلش بوت (Flash butt) به هم متصل می شوند.

جوشکاری به روش قوس الکتریکی:

در این روش که بسیار متداول است ، ابتدا دو سر ریل ها را پیش گرم نموده ،سپس جوشکاری با الکترودهای مخصوص انجام می گردد.

تجهیزات و مواد مصرفی در فرآیند جوشکاری به روش قوس الکتریکی:

۱- الکترود مصرفی برای سایز متوسط تیپ A

برای کف ریل: قطر ۳/۲۵ میلیمتر (۶ عدد) AWS (E7018)

برای جان ریل: قطر ۵ میلیمتر (۱۰ عدد) AWS (E7018)

برای تاج ریل : قطر ۴ میلیمتر (۱۰ عدد) AWS (E307-E312-E9018)

۲- موتور جوش ۴۰۰ آمپر DC

۳- سیلندر گازی پروپان جهت عملیات پیش گرم (۲ عدد)

۴- مشعل گازی بزرگ با پایه (۲ عدد)

۵- آون جهت گرم کردن الکترودها

۶- ترمومتر ، گچ حرارتی و .... جهت اندازه گیری دما

۷-عایق حرارتی جهت حفاظت از پد لاستیکی

۸-تسمه مسی یا سرامیکی به ابعاد ۱۳×۶۰×۲۰۰ میلی متر برای عرض کف 150 MM

کلیه الکترودها قبل از مصرف باید به مدت ۳ ساعت و در دمای ۲۵۰ سانتی گراد خشک و سپس زمان حمل و جوشکاری در کوره های الکتریکی دستی در دمای ۱۰۰ درجه سانتیگراد نگهداری شوند.

پیش گرم کردن:

جهت پیش گرم کردن از گاز LPG که مشعل آن بر روی پایه ای استوار شده استفاده می گردد. حرارت دادن باید تا دمای ۳۰۰ درجه سانتیگراد ادامه یابد حداقل دمای ۳۰۰ درجه سانتیگراد جهت شروع جوشکاری و در حین فرآیند نیاز می باشد و حرارت دادن باید به طور مرتب توسط ترموکوپل کنترل می گیرد.

(پیش گرم باید ۱۵۰ میلیمتر از سر ، هر ریل را پوشش داده و تمام ضخامت ریل را در برگیرد).

مراحل انجام جوشکاری:

۱-ریل ها را در امتداد هم قرار داده و فاصله بین دو سر ریل ۱۷ تا ۲۰ میلیمتر تنظیم می نماییم.
۲-ایجاد پخی ۱۰ میلیمتری از سر ریل ها
۳-هم راستا نمودن ریل ها با استفاده از سیم فولادی یا ریسمان .
٤-قرار دادن صفحه مسی زیر محل جوشکاری.
۵-فیکس کردن ریل ها به وسیله دو کلمپ به فاصله ۳۰ سانتی متری از سر ریل ها.

روش جوشکاری:

ابتدا با ایجاد فاصله بین ریل ها و با قرار دادن یک قالب در پاشنه و طرفین ریل ها جوشکاری را از لبه کف ریل آغاز می نمائیم. اولین پاس روی لبه ریل اول و دومین پاس روی لبه ریل دوم بدون تماس با جوش پاس اول انجام و سومین پاس جوش های پاس اول و پاس دوم را بهم متصل میکند و در فضای خالی پاشنه جوش تا جان ریل ادامه می یابد.

با انجام هر پاس جوش سرباره آن باید کاملا برداشته شود سپس اقدام به جوشکاری پاس بعدی گردد، در صورتیکه در حین جوشکاری حرارت بین پاس ها کاهش یابد ،حرارت دادن باید از جهت مخالف ادامه یابد.

جهت بالا بردن کیفیت جوش و دستیابی جوشکار در پاس اول و دوم جوشکاری ، پخی سرریل به اندازه ۱۰ میلیمتر ایجاد میگردد.

در این روش نیازی به قالب گرافیتی نبوده و سرد شدن جوش به صورت تدریجی و مدت ۱ الی ۱/۵ ساعت زمان نیاز خواهد داشت، از تسمه مسی یا سرامیکی زیر محل مورد نظر جهت جوشکاری استفاده شده و پس از جوشکاری از محل خارج می گردد.

لازم به ذکر است جوشکاری تا ارتفاع ۲ الی ۳ میلیمتر بالاتر از سطح تاج ریل انجام میگیرد و پس از سرد شدن محل جوشکاری با دقت تا هم سطح شدن با تاج ریل سنگ زده می‌شوند، همچنین سطوح جانبی تاج ریل در صورت نیاز جوشکاری و با سنگ زدن اصلاح می گردند.

دقت ، سرعت عمل جوشکاری و استفاده از الکترود و تجهیزات جوشکاری مناسب و البته جوشکار ماهر در کیفیت و عمر مفید و عدم دفرمه شدن آنها نقش بسزایی دارند.

جهت صحت انجام عملیات جوشکاری بازرسی چشمی ، تست UT به صورت ۱۰۰٪ و تست LP به صورت ۳۰٪ پس از ۲۴ ساعت انجام می گردد.

اتصال ریل ها به روش جوش ترمیت:

در جوشکاری ترمیت از طریق تهیه قالب برای دو سر ریل ها و حرارت دادن دو سر آن تا حرارت ۴۰۰ الی ۶۰۰ درجه سانتیگراد به مدت ۲ دقیقه انجام می گیرد، سپس مخلوط ترمیت متشکل از براده آلومینیوم ، اکسید آهن و مواد افزودنی دیگر نظیر Si , را ذوب کرده و در قالبی که دو سرریل در آن است می ریزند، سپس قالب را پوشانده تا از سرد شدن سریع آن جلوگیری کند، این روش جوشکاری سریع با پیش گرمادهی کوتاه مدت را (SKV) نیز می نامند.

نکته : رفرنس مربوط به دستورالعمل های جوشکاری در انتهای کتاب (پیوست دوم) آمده است.

آماده سازی سطوح و پوشش های رنگی:

سیستم های رنگ آمیزی و پاک سازی سطح:

حفاظت تجهیزات در مقابل خوردگی در مناطقی که میزان رطوبت و سایر عوامل خورنده بیشتر هستند تضمین کننده ماندگاری بهتر تجهیزات در مدت زمان عمر مفید آنها خواهد بود ، که با توجه به تفاوت روش های مختلف رنگ آمیزی در ادامه به ویژگی های آنها پرداخته می شود. جهت حفظ تأسیسات و سازه های صنعتی در مقابل خوردگی به وسیله پوشش های حفاظتی بایدچهار مورد را مد نظر قرار داد:

۱- انتخاب مواد (رنگ)
۲ - انتخاب سیستم حفاظتی
۳- آماده سازی سطح
۴- روشهای اجرا

موارد فوق هر یک در جای خود بسیار مهم هستند، رنگ به تنهایی معجزه ای نمی کند، بلکه مسائل مربوط به آماده سازی سطح و روش صحیح اعمال رنگ و همچنین شرایط جوی و سازگاری لایه های مختلف رنگ با یکدیگر از اهمیت بالایی برخوردارند.

باید توجه داشت که سیستم رنگ از لایه های آستری میانی و رویه تشکیل شده است که هر یک وظیفه خاصی دارند. لایه های آستری (Primer) علاوه بر چسبندگی بر سطح، نقش حفاظتی و به عبارت دیگر نقش ضد خوردگی را بازی میکنند و معمولاً نمیتوانند به جای لایه های میانی و رویه مورد استفاده قرار گیرند.

لایه میانی (intermediate) نیز باید با لایه آنها و هم با رویه سازگاری داشته و اغلب موارد نقش هر دو را بازی می کند، لایه رویه (topcoat) نیز در مقابل شرایط جوی ، رطوبت ، تابش اشعه خورشید،سایش و ... پایدار بوده و در نهایت مجموع هر سه لایه سطح را در مقابل خوردگی انتخاب سیستم اعمال رنگ و ضخامت لایه های آن در شرایط مختلف آب و هوایی از نظر آب و هوای خشک یا مرطوب متفاوت می باشد.

دستورالعمل پاکسازی سطح و رنگ آمیزی به شرح زیر توصیه می گردد :

رنگ آمیزی روش T1:

این روش جهت سازه هایی است که در محیط های با آب و هوای خشک و فضای سر پوشیده (indoor) استفاده می گردد.

+ پاکسازی سطح کلاس تمیزکاری دستی و فرچه زنی مطابق استاندارد SSPC

+ضخامت لایه های رنگ مجموعاً ۱۲۰ میکرون در ۳ لایه به شرح زیر می باشد:

-لایه اول	آستر زینک فسفات آلکیدی	۴۰ میکرون
-لایه دوم	میانی آلکیدی	۴۰ میکرون
-لایه سوم	رویه آلکیدی	۴۰ میکرون

رنگ آمیزی روش T2:

که جهت سازه هایی که در محیط های نیمه مرطوب فضای سرپوشیده (Indoor) استفاده می گردد.

پاکسازی سطح کلاس ۲/۱ SA2 مطابق استاندارد SSPC و ضخامت لایه های رنگ مجموعاً ۱۵۰ میکرون در ۳ لایه به شرح زیر می باشد ، ضمنا برای محیط های مرطوب و نمکی حداقل ضخامت سه لایه ۳۲۰ میکرون توصیه میگردد.

-لایه اول	آستر زینک فسفات اپوکسی یا آستر زینک ریچ اپوکسی
-لایه دوم	میانی اپوکسی پلی آمید
-لایه سوم	رویه اپوکسی پلی آمید

رنگ آمیزی روش T3:

جهت سازه هایی که در محیط های مرطوب و فضای باز (outdoor) استفاد می گردند. پاکسازی سطح کلاس Sa2 ۱/۲ و ضخامت رنگ مجموعاً ۱۸۰ میکرون به شرح زیر می باشد:

- لایه اول	آستر زینک پلی آمید	۶۰ میکرون
- لایه دوم	میانی MIO	۶۰ میکرون
- لایه سوم	رویه پلی اورتان	۶۰ میکرون

02

Rail Fixing Clips , Clamps

پابندها یا گیره های ریلی

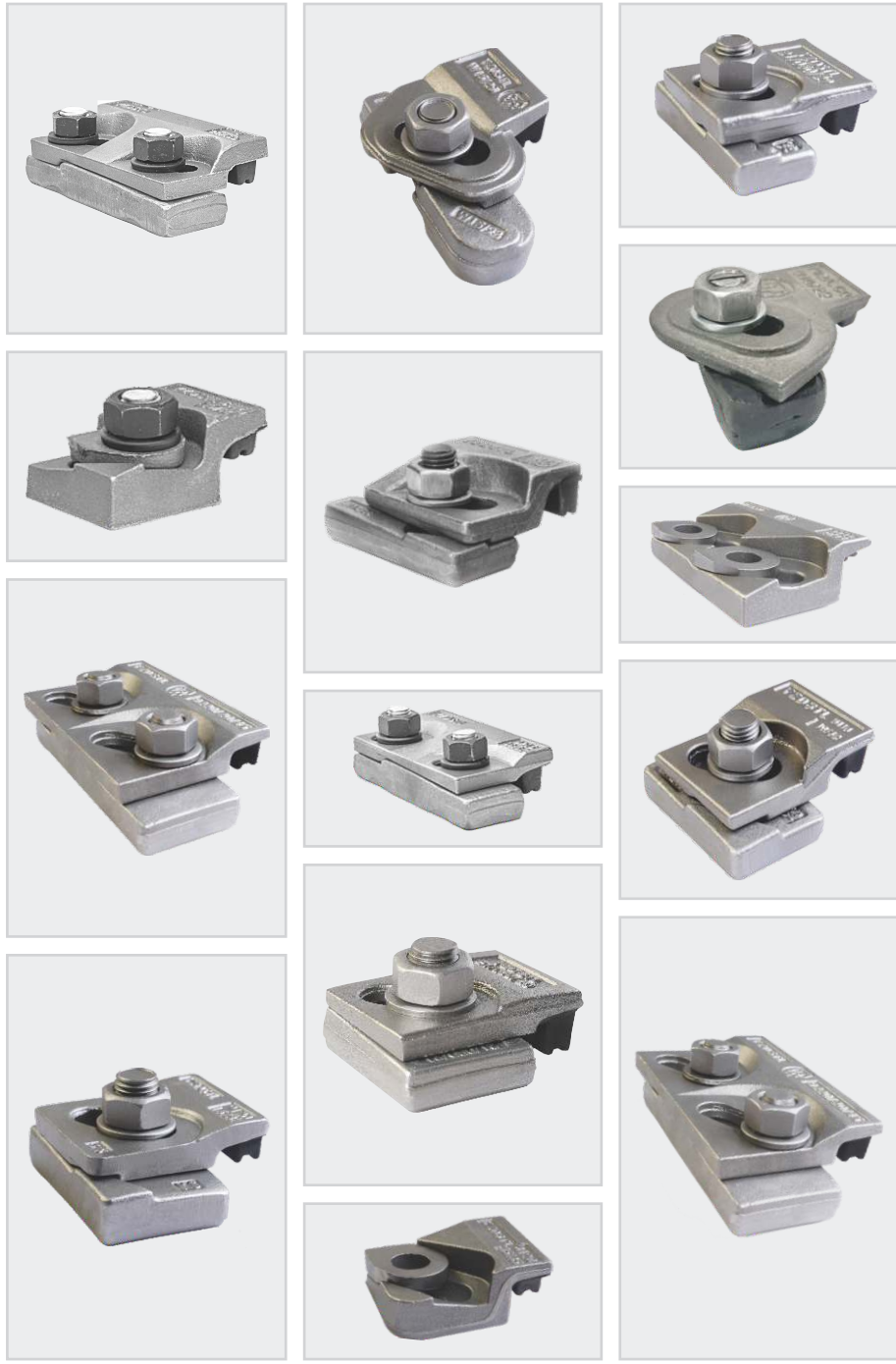

Tel: +98 21 66 69 5000
Fax: +98 21 66 62 9067
www.yazdsteel.com
info@yazdsteel.com

CLIP SELECTION FOR EACH RAIL

	F (mm)	K (mm)	H (mm)	Weight (kg/m)	Mounting with Pad	Mounting without Pad
A 45	125.0	45.0	55.0	22.10	21/050/BP	21/050/AP
A 55	150.0	55.0	65.0	31.80	21/050/BL	21/050/AL
A 65	175.0	65.0	75.0	43.10	21/050/BL	21/050/AL
A 75	200.0	75.0	85.0	56.20	21/050/BJ	21/050/AJ
A 100	200.0	100.0	95.0	74.30	21/050/BJ	21/050/AJ
S 30	108.0	60.3	108.0	30.03	21/050/BL	21/050/AL
S 49	125.0	67.0	149.0	49.43	21/050/BJ	21/050/AJ
S 54	125.0	67.0	154.0	54.54	21/050/BI	21/050/AI
UIC 54	140.0	70.0	159.0	54.43	21/050/BJ	21/050/AJ
UIC 60	150.0	72.0	172.0	60.34	21/050/BJ	21/050/AJ
JIS 30	108.0	60.3	108.0	30.03	21/050/BL	21/050/AL
JIS 50 N	127.0	65.0	153.0	50.40	21/050/BI	21/050/AI
JIS 60	145.0	65.0	174.0	60.80	21/050/BH	21/050/AH

for rail sections other than those listed on this page , please contact us.

INSTALLATION INSTRUCTIONS

Weld all round the clip base, except the side closest and parallel to the rail with a 4mm throat thickness fillet weld using low hydrogen electrodes.

Recommended electrodes AWS E 7018 or E 6013.
Clip base is made from weldable grade steel.
if a continuous weld around the clip base is required this is possible.

WELD DETAIL

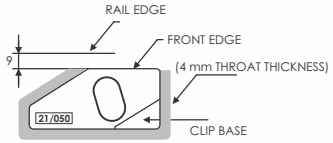

- فاصله بین کلمپ ها بر اساس ماکزیمم نیروهای جانبی حداقل۴۰ سانتی متر و حداکثر ۶۰ سانتی متر توصیه می گردد.
- ارتفاع لبه لاستیکی با توجه به نوع ریل توسط سازنده تعیین می گردد.
- کلیه محصولات شرکت یزد استیل به مدت ۲۴ ماه، از زمان تحویل دارای گارانتی می باشند.

- The distance between the clamps is recommended to be at least 40 cm and at most 60 cm based on the maximum lateral forces.
- The height of the rubber nose is determined by the manufacturer according to the type of rail.
- All products of YAZD STEEL Co. are guaranteed for 18 months from the time of delivery.

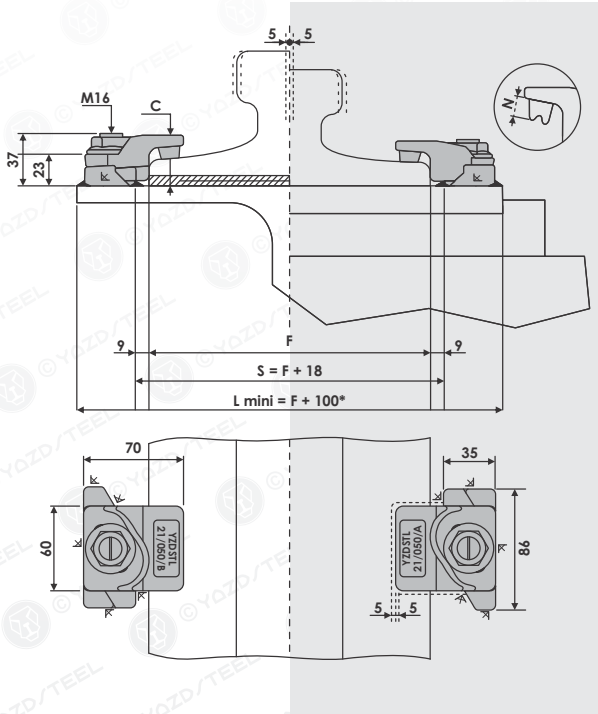

TYPE 21/050

The **(GANTREX DESIGN)** 21/050 adjustable crane rail clip is designed to fix light rails in the most arduous applications, it can withstand horizontal force from the rail of 50 KN (5 tonnes).
The clip can be use for rail type: A45, A55 A65, A75, S20 , S30 , S33, S41, QU70, QU80 JIS37, UIC54 , UIC60.

Clips	C max (mm)	Tightening torque (Nm)	Admissible side load (Kn)	Est'd weight (Kg)
21/050/AN 21/050/BN	29 36	125	50	0.600 0.620

NOTE: nose height , not compressed , adapted to the rail type (see table overleaf).

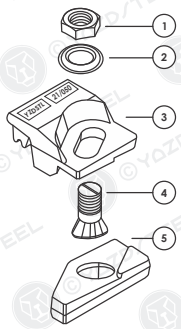

COMPONENTS :
1 - M16 NUT Cl.8
2 - M16 hardened flat washer DIN 6919
3 - Upper part material: ductile cast iron ASTM A536
4 - M16 conical head bolt 8.8
5 - Lower part material: Forged steel S275JR or AISI 1030

FEATURES:
- The two main parts are locked Together on tightening
- The clip has a self-tightening mechanism.
- A special vulcanized rubber block applies a controlled force To the rail.

CLIP SELECTION FOR EACH RAIL

	F (mm)	K (mm)	H (mm)	Weight (kg/m)	Mounting with Pad	Mounting without Pad
A 65	175.0	65.0	75.0	43.10	21/080/BQ	21/080/AQ
A 75	200.0	75.0	85.0	56.20	21/080/BQ	21/080/AQ
A 100	200.0	100.0	95.0	74.30	21/080/BK	21/080/AK
A 120	220.0	120.0	105.0	100.00	21/080/BK	21/080/AK
A 150	220.0	150.0	150.0	150.30	21/080/CQ	21/080/BQ
S 49	125.0	67.0	149.0	49.43	21/080/BQ	21/080/AQ
S 54	125.0	67.0	154.0	54.54	21/080/BK	21/080/AK
S 64	125.0	74.0	172.0	64.92	21/080/BK	21/080/AK
UIC 54	140.0	70.0	159.0	54.43	21/080/BQ	21/080/AQ
UIC 60	150.0	72.0	172.0	60.34	21/080/BQ	21/080/AQ
CR 73	140.0	100.0	135.0	73.30	21/080/BI	21/080/AI
CR 100	155.0	120.0	150.0	100.20	21/080/CK	21/080/BK

for rail sections other than those listed on this page , please contact us.

INSTALLATION INSTRUCTIONS

Weld all round the clip base, except the side closest and parallel to the rail with a 4mm throat thickness fillet weld using low hydrogen electrodes.

Recommended electrodes AWS E 7018 or E 6013.
Clip base is made from weldable grade steel.
If a continuous weld around the clip base is required this is possible.

WELD DETAIL

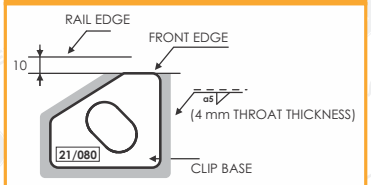

• فاصله بین کلمپ ها بر اساس ماکزیمم نیروهای جانبی حداقل۴۰ سانتی متر و حداکثر ۶۰ سانتی متر توصیه می گردد.
• ارتفاع لبه لاستیکی با توجه به نوع ریل توسط سازنده تعیین می گردد.
• کلیه محصولات شرکت یزد استیل به مدت ۱۸ ماه، از زمان نصب تحت شرایط استاندارد دارای گارانتی می باشند.

• The distance between the clamps is recommended to be at least 40 cm and at most 60 cm based on the maximum lateral forces.
• The height of the rubber edge is determined by the manufacturer according to the type of rail.
• All products of YAZDSTEEL Co. are guaranteed for 18 months from the time of installation under standard conditions.

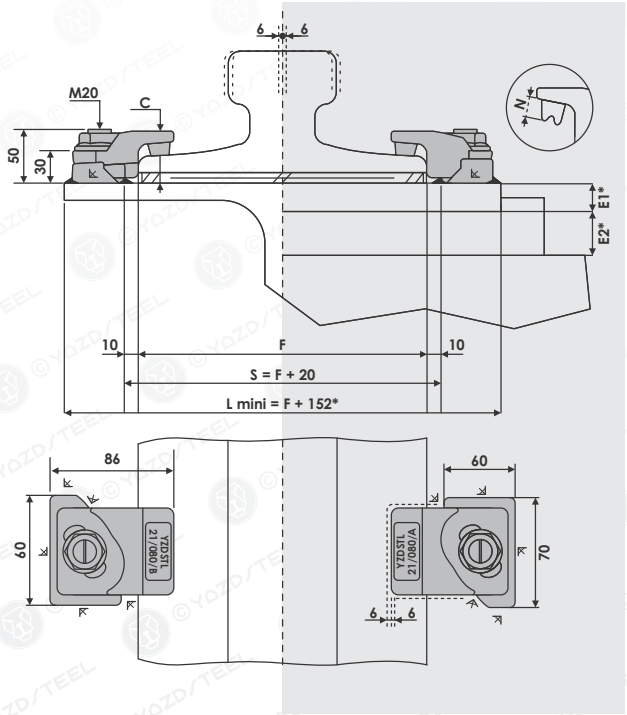

TYPE 21/080

The **(GANTREX DESIGN)** 21/080 adjustable crane rail clip is designed to fix light rails in the most arduous applications, it can Withstand horizontal force from the rail of 80 KN (8 tonnes).
The clip can be use for rail type: A65, A75 A120, A150, QU70 , QU80, JIS37, UIC54 UIC60.

Clips	C max (mm)	Tightening torque (Nm)	Admissible side load (Kn)	Est'd weight (Kg)
21/080/AN	33	250	80	0.950
21/080/BN	40			1.000
21/080/CN	47			1.100

NOTE: nose height , not compressed , adapted to the rail type (see table overleaf).

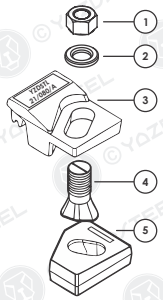

COMPONENTS :
1 - M20 NUT Cl.8
2 - M20 hardened flat washer DIN 6919
3 - Upper part material: ductile cast iron ASTM A536
4 - M20 conical head bolt 8.8
5 - Lower part material: Forged steel S275JR or AISI 1030

FEATURES:
The two main parts are locked Together on tightening
The clip has a self-tightening mechanism.
A special vulcanized rubber block applies a controlled force To the rail.

CLIP SELECTION FOR EACH RAIL

	F (mm)	K (mm)	H (mm)	Weight (kg/m)	Mounting with Pad	Mounting without Pad
A 75	200.0	75.0	85.0	56.20	21/125/BM	21/125/AM
A 100	200.0	100.0	95.0	74.30	21/125/BM	21/125/AM
A 120	220.0	120.0	105.0	100.00	21/125/BJ	21/125/AJ
A 150	220.0	150.0	150.0	150.30	21/125/BI	21/125/AI
S 49	125.0	67.0	149.0	49.43	21/125/BM	21/125/AM
S 54	125.0	67.0	154.0	54.54	21/125/BM	21/125/AM
UIC 54	140.0	70.0	159.0	54.43	21/125/BM	21/125/AM
UIC 60	150.0	72.0	172.0	60.34	21/125/BM	21/125/AM
QU70	120.0	70.0	120.0	53.0	21/125/BM	21/125/AM
QU80	130.0	80.0	120.0	64.0	21/125/BH	21/125/AH
QU100	150.0	100.0	150.0	89.0	21/125/BM	21/125/AM
QU120	170.0	120.0	170.0	118.0	21/125/AJ	—

for rail sections other than those listed on this page , please contact us.

INSTALLATION INSTRUCTIONS

Weld all round the clip base, except the side closest and parallel to the rail with a 4mm throat thickness fillet weld using low hydrogen electrodes.

Recommended electrodes AWS E 7018 or E 6013.
Clip base is made from weldable grade steel.
If a continuous weld around the clip base is required this is possible.

WELD DETAIL

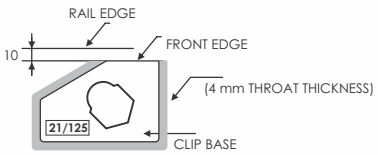

• فاصله بین کلمپ ها بر اساس ماکزیمم نیروهای جانبی حداقل۴۰ سانتی متر و حداکثر ۶۰ سانتی متر توصیه می گردد.
• ارتفاع لبه لاستیکی با توجه به نوع ریل توسط سازنده تعیین می گردد.
• کلیه محصولات شرکت یزد استیل به مدت ۱۸ ماه، از زمان نصب تحت شرایط استاندارد دارای گارانتی می باشند.

•The distance between the clamps is recommended to be at least 40 cm and at most 60 cm based on the maximum lateral forces.
• The height of the rubber edge is determined by the manufacturer according to the type of rail.
• All products of YAZDSTEEL Co. are guaranteed for 18 months from the time of installation under standard conditions.

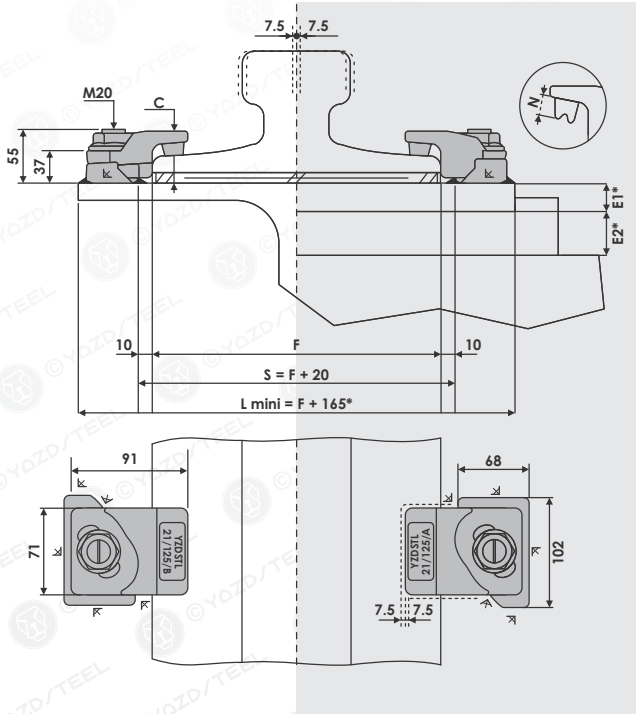

TYPE 21/125

The **(GANTREX DESIGN)** 21/080 adjustable crane rail clip is designed to fix light rails in the most arduous applications, it can withstand horizontal force from the rail of 125 KN (12.5 tonnes).
The clip can be use for rail type: A75, A100 A120, A150, QU70 , QU80, UIC60 & etc.

Clips	C max (mm)	Tightening torque (Nm)	Admissible side load (Kn)	Est'd weight (Kg)
21/125/AN 21/125/BN	34 41	250	125	1.550 1.600

NOTE: nose height , not compressed , adapted to the rail type (see table overleaf).

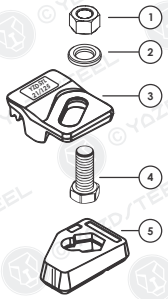

COMPONENTS :
1 - M20 NUT Cl.8
2 - M20 hardened flat washer DIN 6919
3 - Upper part material: ductile cast iron ASTM A536 or Forged Steel
4 - M20 Hexagon head bolt Gr 8.8
5 - Lower part material: Forged steel AISI 1030

FEATURES:
•The two main parts are locked Together on tightening
•The clip has a self-tightening mechanism.
•A special vulcanized rubber block applies a controlled force To the rail.

CLIP SELECTION FOR EACH RAIL

	F (mm)	K (mm)	H (mm)	Weight (kg/m)	Mounting with Pad	Mounting without Pad
A 65	175.0	65.0	75.0	43.10	22/130/BQ	22/130/AM
A 75	200.0	75.0	85.0	56.20	22/130/BQ	22/130/AM
A 100	200.0	100.0	95.0	74.30	22/130/BM	22/130/AM
A 120	220.0	120.0	105.0	100.00	22/130/BJ	22/130/AJ
A 150	220.0	150.0	150.0	150.30	22/130/BJ	—
S 49	125.0	67.0	149.0	49.43	22/130/BM	22/130/AM
S 54	125.0	67.0	154.0	54.54	22/130/BM	22/130/AM
S 64	150.0	74.0	172.0	64.92	22/130/BM	22/130/AJ
UIC 54	140.0	70.0	159.0	54.43	22/130/BQ	22/130/AM
UIC 60	150.0	72.0	172.0	60.34	22/130/BM	22/130/AM
JIS 50 N	127.0	65.0	153.0	50.40	22/130/BM	22/130/AM
JIS 60	145.0	65.0	174.0	60.80	22/130/BM	22/130/AJ

for rail sections other than those listed on this page , please contact us.

INSTALLATION INSTRUCTIONS

Weld all round the clip base, except the side closest and parallel to the rail with a 4mm throat thickness fillet weld using low hydrogen electrodes.

Recommended electrodes AWS E 7018 or E 6013.
Clip base is made from weldable grade steel.
if a continuous weld around the clip base is required this is possible.

WELD DETAIL

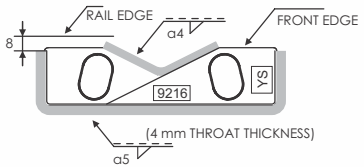

- فاصله بین کلمپ ها بر اساس ماکزیمم نیروهای جانبی حداقل۴۰ سانتی متر و حداکثر ۶۰ سانتی متر توصیه می گردد.
- ارتفاع لبه لاستیکی با توجه به نوع ریل توسط سازنده تعیین می گردد.
- کلیه محصولات شرکت یزد استیل به مدت ۱۸ ماه، از زمان نصب تحت شرایط استاندارد دارای گارانتی می باشند.

- The distance between the clamps is recommended to be at least 40 cm and at most 60 cm based on the maximum lateral forces.
- The height of the rubber edge is determined by the manufacturer according to the type of rail.
- All products of YAZDSTEEL Co. are guaranteed for 18 months from the time of installation under standard conditions.

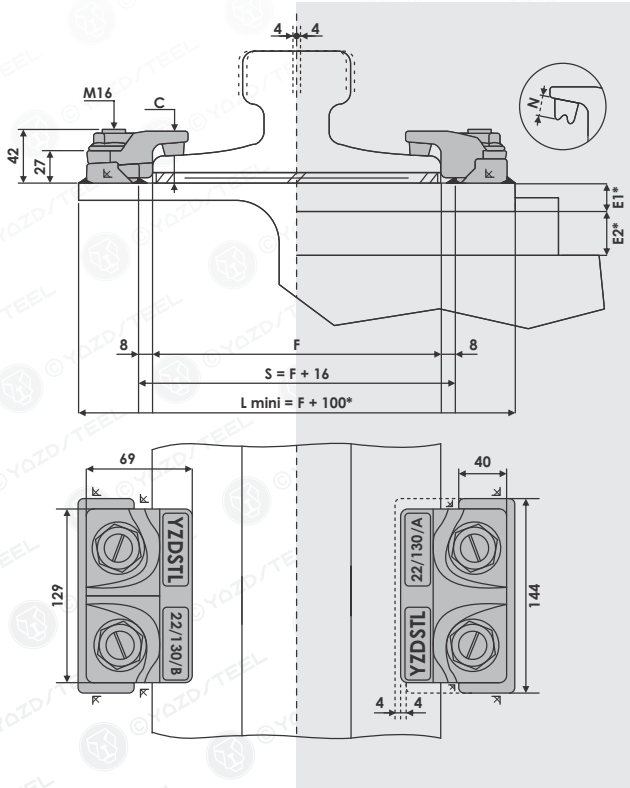

TYPE 22/130

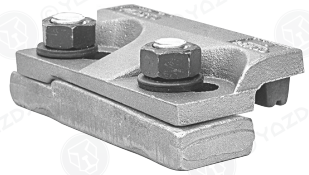

The **(GANTREX DESIGN)** 22/130 adjustable crane rail clip is designed to fix heavy rails in the most arduous applications, it can Withstand horizontal force from the rail of 130 KN(13 tonnes).
The clip can be use for rail type: A65, A75 QU70, QU80, QUI100 , UIC54, UIC60 , etc.

Clips	C max (mm)	Tightening torque (Nm)	Admissible side load (Kn)	Est'd weight (Kg)
22/130/AN 22/130/BN	33 43	150	125	1.450 1.550

NOTE: nose height , not compressed , adapted to the rail type (see table overleaf).

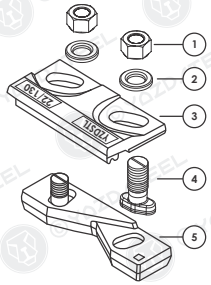

COMPONENTS :
1 - M16 NUT Cl.8
2 - M16 hardened flat washer DIN 6919
3 - Upper part material: ductile cast iron ASTM A536
4 - M16 T-head bolt Gr 8.8
5 - Lower part material: Forged steel S275JR or AISI 1030

FEATURES:
- The two main parts are locked Together on tightening
- The clip has a self-tightening mechanism.
- A special vulcanized rubber block applies a controlled force To the rail.

CLIP SELECTION FOR EACH RAIL

	F (mm)	K (mm)	H (mm)	Weight (kg/m)	Mounting with Pad	Mounting without Pad
A 75	200.0	75.0	85.0	56.20	22/200/BQ	—
A 100	200.0	100.0	95.0	74.30	22/200/BQ	—
A 120	220.0	120.0	105.0	100.00	22/200/BJ	—
A 150	220.0	150.0	150.0	150.30	22/200/BJ	22/200/BQ
S 49	125.0	67.0	149.0	49.43	22/200/BQ	—
S 54	125.0	67.0	154.0	54.54	22/200/BQ	—
S 64	150.0	74.0	172.0	64.92	22/200/BQ	—
UIC 54	140.0	70.0	159.0	54.43	22/200/BQ	—
UIC 60	150.0	72.0	172.0	60.34	22/200/BQ	—
101 CR	165.0	100.0	155.0	100.38	22/200/CQ	22/200/BQ
JIS 50 N	127.0	65.0	153.0	50.40	22/200/BQ	—
CR 100	155.0	120.0	150.0	100.20	22/200/CQ	22/200/BQ

for rail sections other than those listed on this page , please contact us.

INSTALLATION INSTRUCTIONS

Weld all round the clip base, except the side closest and parallel to the rail with a 4mm throat thickness fillet weld using low hydrogen electrodes.

Recommended electrodes AWS E 7018 or E 6013.
Clip base is made from weldable grade steel.
if a continuous weld around the clip base is required this is possible.

WELD DETAIL

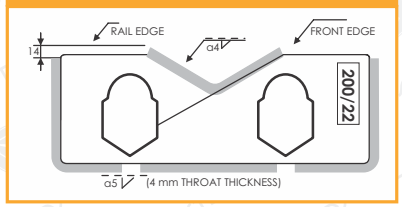

- فاصله بین کلمپ ها بر اساس ماکزیمم نیروهای جانبی حداقل۴۰ سانتی متر و حداکثر ۶۰ سانتی متر توصیه می گردد.
- ارتفاع لبه لاستیکی با توجه به نوع ریل توسط سازنده تعیین می گردد.
- کلیه محصولات شرکت یزد استیل به مدت ۱۸ ماه، از زمان نصب تحت شرایط استاندارد دارای گارانتی می باشند.

- The distance between the clamps is recommended to be at least 40 cm and at most 60 cm based on the maximum lateral forces.
- The height of the rubber edge is determined by the manufacturer according to the type of rail.
- All products of YAZDSTEEL Co. are guaranteed for 18 months from the time of installation under standard conditions.

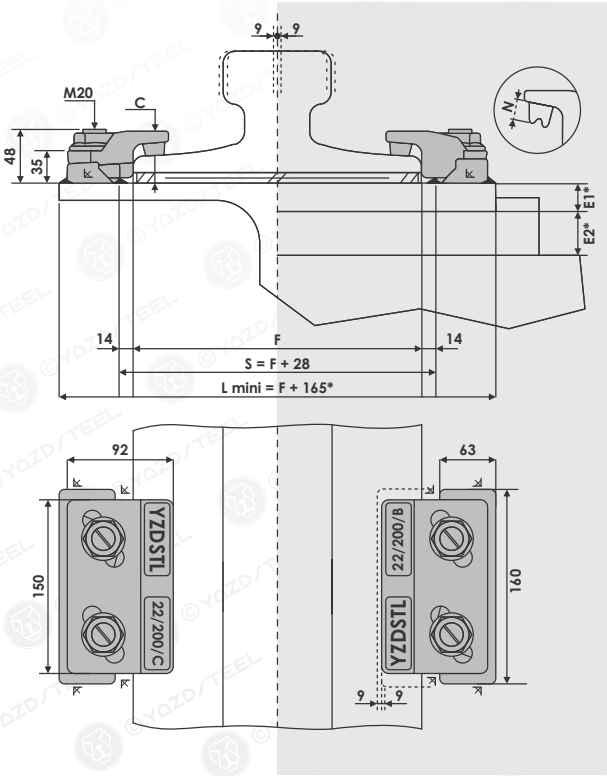

TYPE 22/200

The **(GANTREX DESIGN)** 22/200 adjustable crane rail clip is designed designed to fix the largest rails in the most arduous applications it can withstand horizontal from the rail of 200 KN (20.4 tonnes).
Its low profile allows it to be used with cranes which are fitted with guide rollers.
The clip can be use for rail type AI 00, AI 20 A150 , CR100, MRS87 CR175 , QUI 20 , etc .

Clips	C max (mm)	Tightening torque (Nm)	Admissible side load (Kn)	Est'd weight (Kg)
22/200/BN 22/200/CN	45 52	250	200	2.700 2.800

NOTE: nose height , not compressed , adapted to the rail type (see table overleaf).

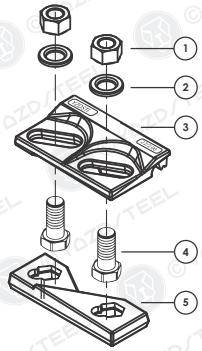

COMPONENTS :
1 - M20 NUT Cl.8
2 - M20 hardened flat washer DIN 6919
3 - Upper part material: ductile cast iron ASTM A536
4 - M20 Hexagon head bolt Gr 8.8
5 - Lower part material: Forged steel S275JR or AISI 1030

FEATURES:
- The two main parts are locked Together on tightening
- The clip has a self-tightening mechanism.
- A special vulcanized rubber block applies a controlled force To the rail.

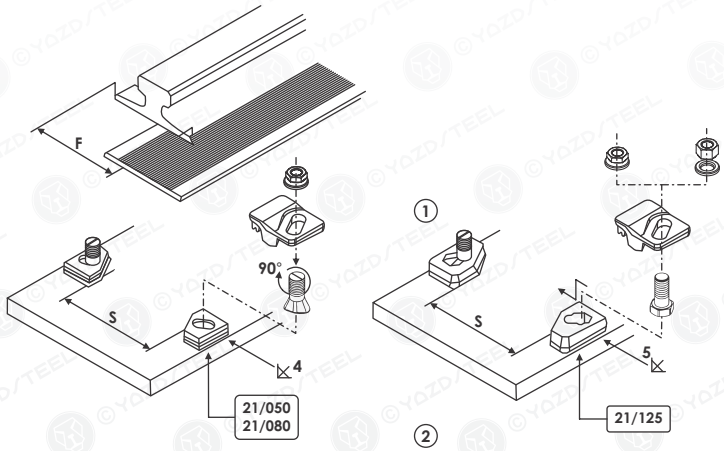

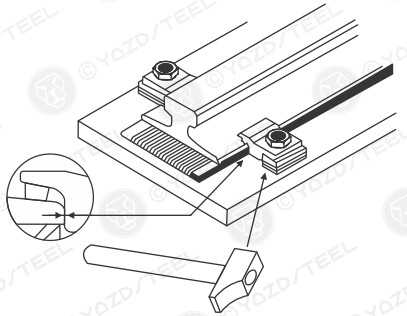

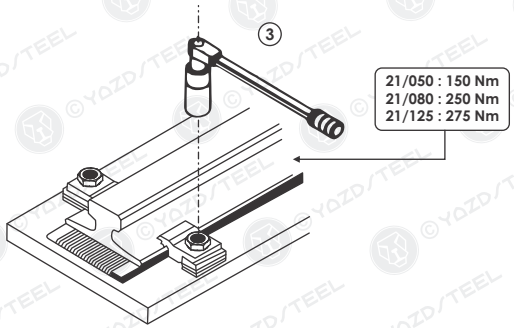

INSTALLATION GUIDE | Welded base fixing YAZD/TEEL

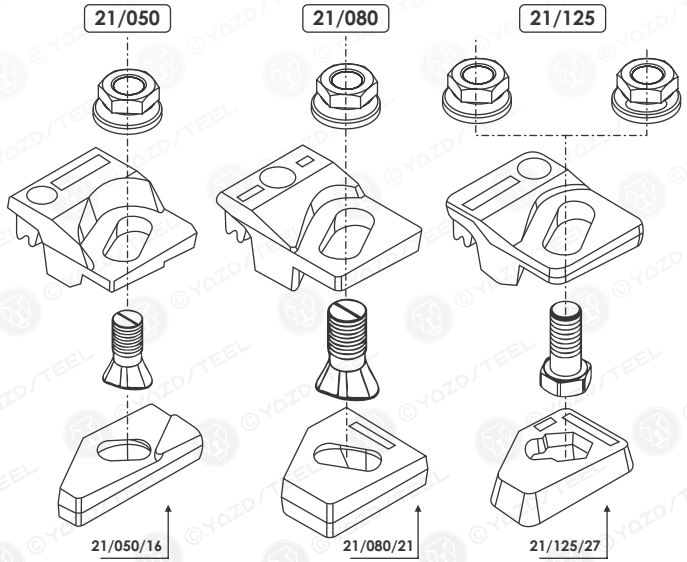

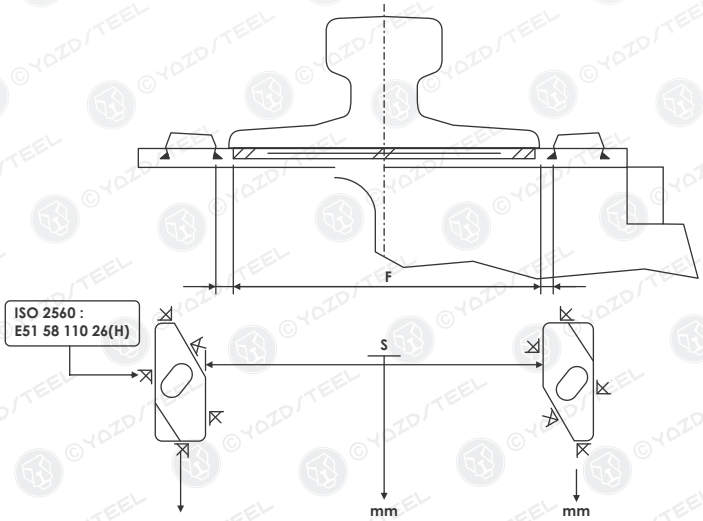

21/050/16	S=F+18	4
21/080/21	S=F+20	4
21/125/27	S=F+20	5

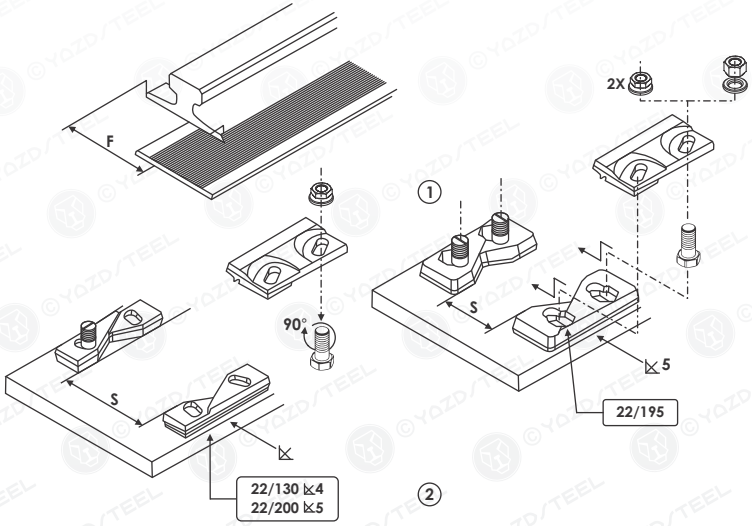

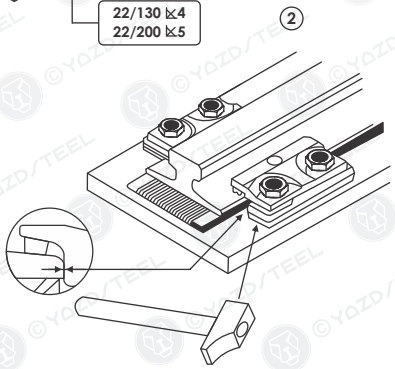

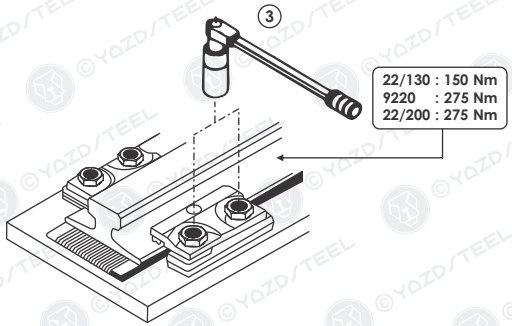

INSTALLATION GUIDE | Welded base fixing YAZD/TEEL

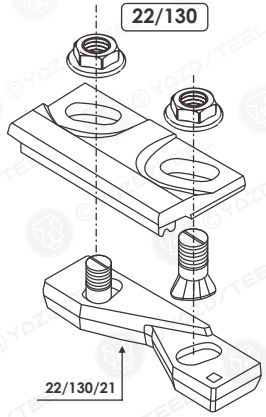

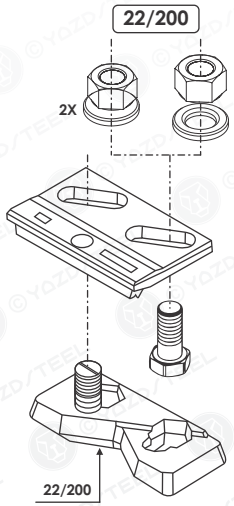

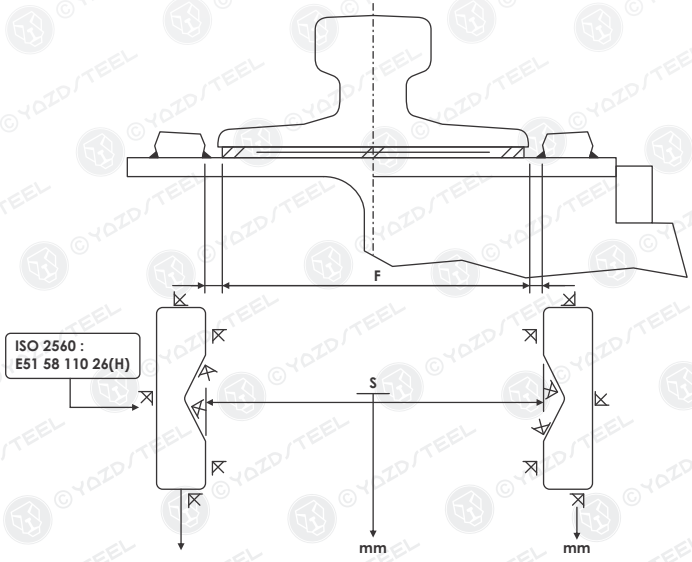

22/130/21	S=F+16	4
22/195/25	S=F+22	5
22/200/23	S=F+28	5

9116/08 | Gantrail Welded base fixing YAZD/TEEL

CLIP SELECTION FOR EACH RAIL

	F (mm)	C (mm)	A (mm)	1.CLIP REFERENCE FOR RAIL WITH PAD	2.CLIP REFERENCE FOR RAIL WITHOUT PAD
A55	150	55	65	9116/08/37	9116/08/29
A65	175	65	75	9116/08/37	9116/08/29
A75	200	75	85	9116/08/37	9116/08/29
A100	200	100	95	9116/08/37	9116/08/29
S30	108	60	108	9116/08/37	9116/08/29
S33	105	58	134	9116/08/37	9116/08/29
S41	125	67	138	9116/08/37	9116/08/29
S49	125	67	149	9116/08/37	9116/08/29
56E1	140	70	159	9116/08/37	9116/08/29
QU70	120	70	120	9116/08/37	9116/08/29
QU80	130	80	130	9116/08/37	9116/08/29
JIS37	122	63	122	9116/08/37	9116/08/29
31Kg AS	108	64	118	9116/08/37	9116/08/29
41Kg AS	127	64	137	9116/08/37	9116/08/29
50Kg AS	127	70	154	9116/08/37	9116/08/29
UIC54	140	70	159	9116/08/37	9116/08/29
UIC60	150	72	172	9116/08/37	9116/08/29

for rail sections other than those listed on this page , please contact us.

INSTALLATION INSTRUCTIONS

Weld all round the clip base, except the side closest and parallel to the rail with a 4mm throat thickness fillet weld using low hydrogen electrodes.

Recommended electrodes AWS E 7018 or E 6013.
Clip base is made from weldable grade steel.
if a continuous weld around the clip base is required this is possible.

WELD DETAIL

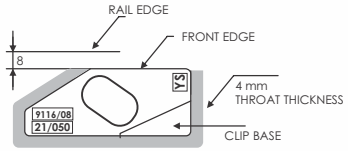

- فاصله بین کلمپ ها بر اساس ماکزیمم نیروهای جانبی حداقل۴۰ سانتی متر و حداکثر ۶۰ سانتی متر توصیه می گردد.
- ارتفاع لبه لاستیکی با توجه به نوع ریل توسط سازنده تعیین می گردد.
- کلیه محصولات شرکت یزد استیل به مدت ۱۸ ماه، از زمان نصب تحت شرایط استاندارد دارای گارانتی می باشند.

- The distance between the clamps is recommended to be at least 40 cm and at most 60 cm based on the maximum lateral forces.
- The height of the rubber edge is determined by the manufacturer according to the type of rail.
- All products of YAZDSTEEL Co. are guaranteed for 18 months from the time of installation under standard conditions.

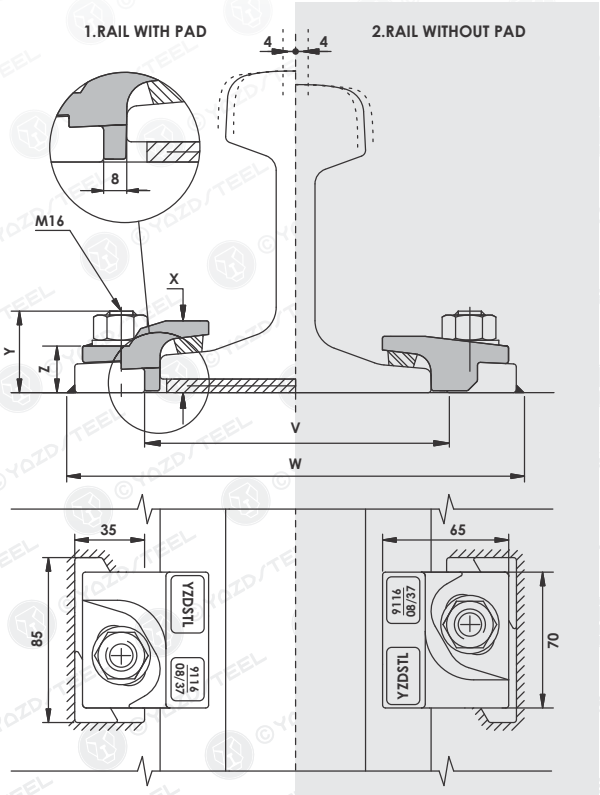

Minimum assembly width - W = Rail width (F) + 100mm V = Rail width (F) + 16mm
NOTE: For ground track with M20 anchor bolts W = Rail width (F) + 130mm

TYPE 9116/08

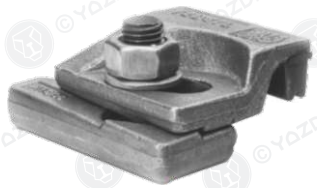

The **(GANTRAIL DESIGN)** 9116/08 adjustable crane rail clip is designed to fix light rails on narrow girders, in the most arduous applications.
It can withstand a horizontal force from the rail of 55kN (5.6 tonnes).
Its low profile allows it to be used with cranes that are fitted with guide rollers.
According to next table .

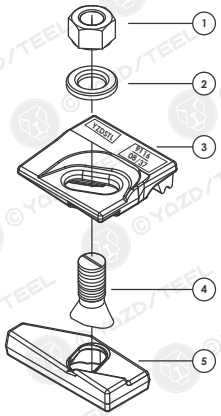

DIMENSION (mm):

REF NO.	X (mm)	Y (mm)	Z (mm)	WEIGHT (Kg)	Side Load Max	Tightening Torque N/M
9116/08/29	29	42	24	0.724	55 kN	125 N/M
9116/08/37	37	42	24	0.730	55 kN	125 N/M

COMPONENTS :

1 - M16 NUT Cl.8
2 - M16 hardened flat washer DIN6919
3 - Upper part material: ductile cast iron ASTM A536 or Forged Steel AISI 1030
4 - M16 conical head bolt 8.8
5 - Lower part material: forged steel S275JR or AISI 1030

FEATURES:

- The proven design has been used successfully for many years throughout the world.
- The clip is bolted to the rail support.
- The two main parts are locked together on tightening the nut.
- A special vulcanized rubber block applies a controlled force to the rail.

SPECIFICATIONS:

MAX SIDE LOAD 55kN
08 mm HORIZONTAL RAIL ADJUSTMENT

CLIP SELECTION FOR EACH RAIL

	F (mm)	C (mm)	A (mm)	1.CLIP REFERENCE FOR RAIL WITH PAD	2.CLIP REFERENCE FOR RAIL WITHOUT PAD
A45	125	45	55	9116/10/32	9116/10/25
A55	150	55	65	9116/10/32	9116/10/25
A65	175	65	75	9116/10/32	9116/10/25
A75	200	75	85	9116/10/32	9116/10/25
S20	82	44	100	9116/10/32	9116/10/25
S30	108	60	108	9116/10/32	9116/10/25
S33	105	58	134	9116/10/32	9116/10/25
QU70	120	70	120	9116/10/32	9116/10/25
QU80	130	80	130	9116/10/32	9116/10/25
22Kg BHP	94	51	94	9116/10/32	9116/10/25
31Kg AS	108	64	118	9116/10/32	9116/10/25
41Kg AS	127	64	137	9116/10/32	9116/10/25
UIC54	140	70	159	9116/10/32	9116/10/25

for rail sections other than those listed on this page , please contact us.

INSTALLATION INSTRUCTIONS

Weld all round the clip base, except the side closest and parallel to the rail with a 4mm throat thickness fillet weld using low hydrogen electrodes.

Recommended electrodes AWS E7018 or E6013.
Clip base is made from weldable grade steel.
If a continuous weld around the clip base is required this is possible.

WELD DETAIL

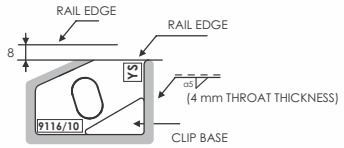

- فاصله بین کلمپ ها بر اساس ماکزیمم نیروهای جانبی حداقل۴۰ سانتی متر و حداکثر ۶۰ سانتی متر توصیه می گردد.
- ارتفاع لبه لاستیکی با توجه به نوع ریل توسط سازنده تعیین می گردد.
- کلیه محصولات شرکت یزد استیل به مدت ۱۸ ماه، از زمان نصب تحت شرایط استاندارد دارای گارانتی می باشند.

- The distance between the clamps is recommended to be at least 40 cm and at most 60 cm based on the maximum lateral forces.
- The height of the rubber edge is determined by the manufacturer according to the type of rail.
- All products of YAZDSTEEL Co. are guaranteed for 18 months from the time of installation under standard conditions.

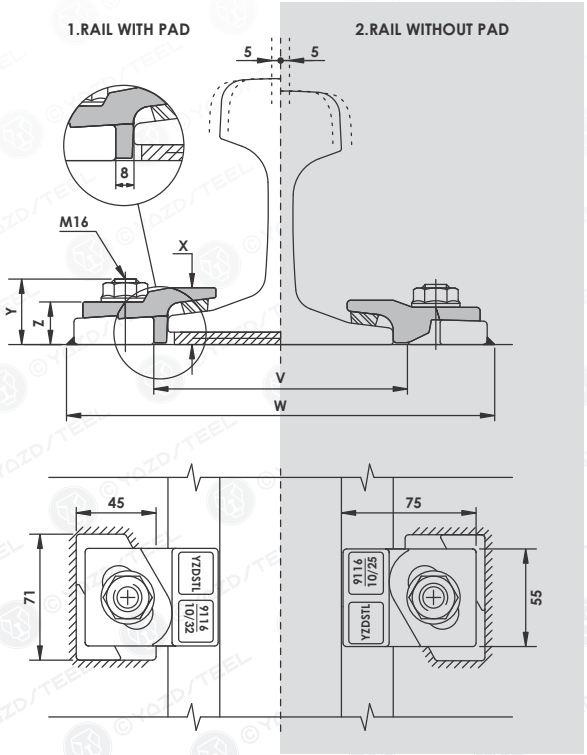

Minimum assembly width - W = Rail width (F) + 118mm V = Rail width (F) + 16mm

TYPE 9116/10

The **(GANTRAIL DESIGN)** 9116/10 adjustable crane rail clips designed to fix light rails in the most arduous applications.
It can withstand a horizontal force from the rail of 40kN(4.1 tonnes). Its low profile allows it to be used with cranes that are According to next table .

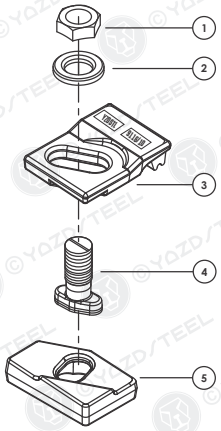

DIMENSION (mm):

REF NO.	X (mm)	Y (mm)	Z (mm)	WEIGHT (Kg)	Side Load Max	Tightening Torque N/M
9116/10/25	25	45	24	0.67	40 kN	125 N/M
9116/10/32	32	45	24	0.69	40 kN	125 N/M

SPECIFICATIONS:
MAX SIDE LOAD 40kN
10mm HORIZONTAL RAIL ADJUSTMENT

FEATURES:
- The proven design has been used successfully for many years throughout the world.
- The clip is welded to the rail support. No access is required from below.
- The two main parts are locked together on tightening the grade 8.8 bolt.
- The clip has a self-tighteningmechanism.
- A special vulcanized rubber block applies a controlled force to the rail.

COMPONENTS :
1 - M16 NUT Cl.8
2 - M16 hardened flat washer DIN6919
3 - Upper part material: ductile cast iron ASTM A536 or Forged AISI 1030
4 - M16 T head bolt 8.8
5 - Lower part material: forged steel S275JR or AISI 1030

9216/08 | Gantrail Welded base fixing YAZD/TEEL

CLIP SELECTION FOR EACH RAIL

	F (mm)	C (mm)	A (mm)	1.CLIP REFERENCE FOR RAIL WITH PAD	2.CLIP REFERENCE FOR RAIL WITHOUT PAD
A75	200	75	85	9216/08/37/10	9216/08/37/17
A100	200	100	95	9216/08/37/10	9216/08/37/17
A120	220	120	105	9216/08/37/10	9216/08/37/17
S49	125	67	149	9216/08/37/10	9216/08/37/17
S54	125	67	154	9216/08/37/10	9216/08/37/17
56E1	140	70	159	9216/08/37/10	9216/08/37/17
89Kg CR	178	102	114	9216/08/37/10	9216/08/37/17
MRS86	165	102	102	9216/08/37/10	9216/08/37/17
MRS87A (PRI85R)	152	102	152	9216/08/37/10	9216/08/37/17
ISCR120	170	120	170	9216/08/37/10	9216/08/37/17
QU80	130	80	130	9216/08/37/10	9216/08/40/17
QU100	150	100	150	9216/08/37/10	9216/08/37/17
QU120	170	120	170	9216/08/37/10	9216/08/40/17
JIS50N	127	64	153	9216/08/37/10	9216/08/37/17
JIS60	145	64	174	9216/08/37/10	9216/08/37/17
CR100	155	120	150	9216/08/37/10	9216/08/40/17

for rail sections other than those listed on this page , please contact us.

INSTALLATION INSTRUCTIONS

Weld all round the clip base, except the side closest and parallel to the rail with a 5mm throat thickness fillet weld using low hydrogen electrodes.

Recommended electrodes AWS E7018 or E6013.
Clip base is made from weldable grade steel.
If a continuous weld around the clip base is required this is possible.

WELD DETAIL

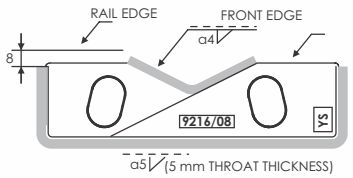

- فاصله بین کلمپ ها بر اساس ماکزیمم نیروهای جانبی حداقل۴۰ سانتی متر و حداکثر ۶۰ سانتی متر توصیه می گردد.
- ارتفاع لبه لاستیکی با توجه به نوع ریل توسط سازنده تعیین می گردد.
- کلیه محصولات شرکت یزد استیل به مدت ۱۸ ماه، از زمان نصب تحت شرایط استاندارد دارای گارانتی می باشند.

- The distance between the clamps is recommended to be at least 40 cm and at most 60 cm based on the maximum lateral forces.
- The height of the rubber edge is determined by the manufacturer according to the type of rail.
- All products of YAZDSTEEL Co. are guaranteed for 18 months from the time of installation under standard conditions.

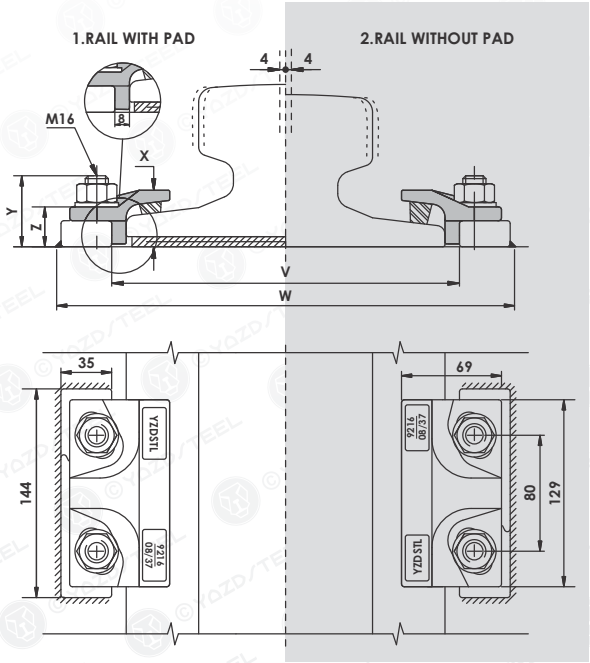

TYPE 9216/08

The **(GANTRAIL DESIGN)** 9216/08 adjustable crane rail clip is designed to fix the largest of rails in the most arduous applications.
It can withstand a horizontal force from the rail of 165kN (16.8 tonnes).
Its low profile allows it to be used with cranes that are According to next table.

Minimum assembly width - W = Rail width (F) + 120mm V = Rail width (F) + 16mm (9216/08/40) , (9216/08/37B)
NOTE: For ground track with M20 anchor bolts W = Rail width (F) + 130mm
NOTE: For ground track with Y= Rail with (F) + 100 mm V= Rail with (F) + 16 mm (9216/08/37/c)

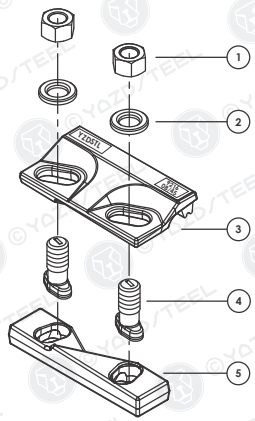

DIMENSION (mm):

REF NO.	X (mm)	Y (mm)	Z (mm)	WEIGHT (Kg)	Side Load Max	Tightening Torque N/M
9216/08/37	37	52	28	1.350	165 kN	125 N/M
9216/08/40	40	52	28	1.370	165 kN	125 N/M
9216/08/45	45	52	28	1.400	165 kN	125 N/M

SPECIFICATIONS:
MAX SIDE LOAD 165kN
8mm HORIZONTAL RAIL ADJUSTMENT

FEATURES:
- The two main parts are locked together on tightening the grade 8.8 bolt.
- The clip has a self-tighteningmechanism.
- A special vulcanized rubber block applies a controlled force to the rail.

COMPONENTS :
1 - M16 NUT Cl.8
2 - M16 hardened flat washer DIN6919
3 - Upper part material: ductile cast iron ASTM A536 or Forged AISI 1030
4 - M16 conical head bolt 8.8
5 - Lower part material: forged steel S275JR or Aisi 1030

CLIP SELECTION FOR EACH RAIL

	F (mm)	C (mm)	A (mm)	1.CLIP REFERENCE FOR RAIL WITH PAD	2.CLIP REFERENCE FOR RAIL WITHOUT PAD
A100	200	100	95	9120/15/41/12	9120/15/35/18
A120	220	120	105	9120/15/41/12	9120/15/35/18
A150	220	150	150	9120/15/41/12	9120/15/35/18
S41	125	67	138	9120/15/41/12	9120/15/35/18
S49	125	67	149	9120/15/41/12	9120/15/35/18
89Kg CR	178	102	114	9120/15/41/12	9120/15/35/18
MRS86	165	102	102	9120/15/41/12	9120/15/35/18
MRS87A (PRI85R)	152	102	152	9120/15/41/12	9120/15/35/18
MRS87B (175CR)	152	102	152	9120/15/41/12	9120/15/35/18
MRS125	180	120	180	9120/15/41/12	9120/15/35/18
QU100	150	100	150	9120/15/41/12	9120/15/35/18
QU120	170	120	170	9120/15/41/12	9120/15/35/18
JIS50	127	63	145	9120/15/35/12	9120/15/35/18
JIS60	145	64	174	9120/15/35/12	9120/15/35/18
CR100	155	120	150	9120/15/41/12	9120/15/35/18
UIC54 E	125	66	161	9120/15/35/12	9120/15/35/18

for rail sections other than those listed on this page , please contact us.

INSTALLATION INSTRUCTIONS

Weld all round the clip base, except the side closest and parallel to the rail with a 4mm throat thickness fillet weld using low hydrogen electrodes.

Recommended electrodes AWS E7018 or E6013.
Clip base is made from weldable grade steel.
If a continuous weld around the clip base is required this is possible.

WELD DETAIL

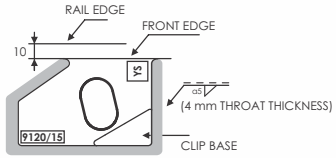

- فاصله بین کلمپ ها بر اساس ماکزیمم نیروهای جانبی حداقل۴۰ سانتی متر و حداکثر ۶۰ سانتی متر توصیه می گردد.
- ارتفاع لبه لاستیکی با توجه به نوع ریل توسط سازنده تعیین می گردد.
- کلیه محصولات شرکت یزد استیل به مدت ۱۸ ماه، از زمان نصب تحت شرایط استاندارد دارای گارانتی می باشند.

- The distance between the clamps is recommended to be at least 40 cm and at most 60 cm based on the maximum lateral forces.
- The height of the rubber edge is determined by the manufacturer according to the type of rail.
- All products of YAZDSTEEL Co. are guaranteed for 18 months from the time of installation under standard conditions.

9120/15 | Gantrail Welded base fixing YAZD/TEEL

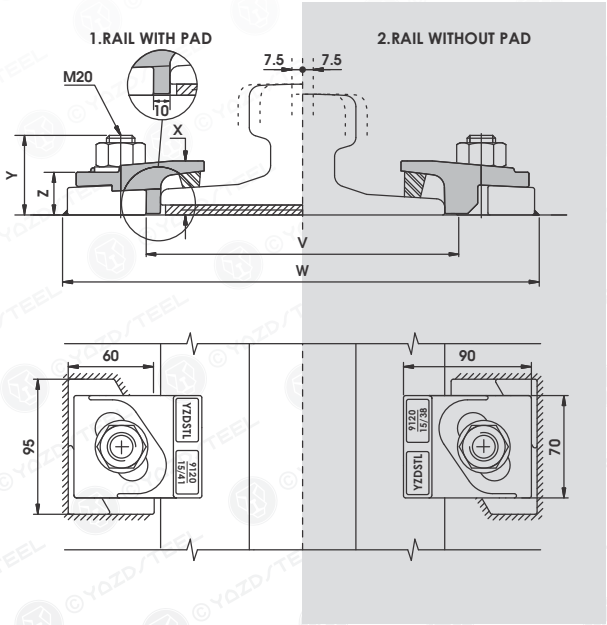

Minimum assembly width - W = Rail width (F) + 156mm V = Rail width (F) + 20mm

TYPE 9120/15

The **(GANTRAIL DESIGN)** 9120/15 adjustable crane rail clip is designed to fix the largest of rails in the most arduous applications.
It can withstand a horizontal force from the rail of 120kN (12.2 tonnes).
Its low profile allows it to be used with cranes that are According to next table.

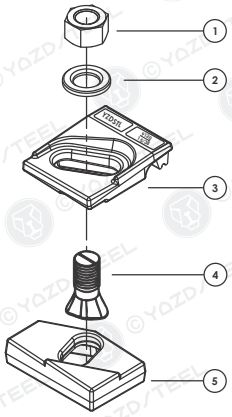

DIMENSION (mm):

REF NO.	X (mm)	Y (mm)	Z (mm)	WEIGHT (Kg)	Side Load Max	Tightening Torque N/M
9120/15/35	35	56	30	1.300	120 kN	250 N/M
9120/15/38	38	56	30	1.300	120 kN	250 N/M
9120/15/41	41	56	30	1.300	120 kN	250 N/M

SPECIFICATIONS:
MAX SIDE LOAD 120kN
15mm HORIZONTAL RAIL ADJUSTMENT

FEATURES:
- The two main parts are locked together on tightening the grade 8.8 bolt.
- The clip has a self-tighteningmechanism.
- A special vulcanized rubber block applies a controlled force to the rail.

COMPONENTS :
1 - M20 NUT Cl.8
2 - M20 hardened flat washer DIN6919
3 - Upper part material: ductile cast iron or ASTM A536
4 - M20 conical head bolt 8.8
5 - Lower part material: forged steel S275JR or AISI 1030

CLIP SELECTION FOR EACH RAIL

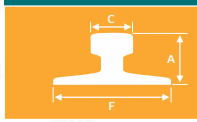	F (mm)	C (mm)	A (mm)	1.CLIP REFERENCE FOR RAIL WITH PAD	2.CLIP REFERENCE FOR RAIL WITHOUT PAD
A100	200	100	95	9220/18/40	9220/18/40
A120	220	120	105	9220/18/40	9220/18/40
A150	220	150	150	9220/18/45	9220/18/40
89Kg CR	178	102	114	9220/18/45	9220/18/45
164KG CR	230	140	150	9220/18/45	9220/18/40
MRS86	165	102	102	9220/18/40	9220/18/40
MRS87A (PRI85R)	152	102	152	9220/18/45	9220/18/40
MRS125	180	120	180	9220/18/45	9220/18/45
MRS192	229	140	157	9220/18/45	9220/18/45
MRS221	220	220	160	9220/18/45	9220/18/40
QU100	150	100	150	9220/18/40	9220/18/40
QU120	170	120	170	9220/18/45	9220/18/40
CR73	140	100	135	9220/18/40	9220/18/40
CR100	155	120	150	9220/18/45	9220/18/40

for rail sections other than those listed on this page , please contact us.

INSTALLATION INSTRUCTIONS

Weld all round the clip base, except the side closest and parallel to the rail with a 4mm throat thickness fillet weld using low hydrogen electrodes.

Recommended electrodes AWS E7018 or E6013.
Clip base is made from weldable grade steel.
If a continuous weld around the clip base is required , this is possible.

WELD DETAIL

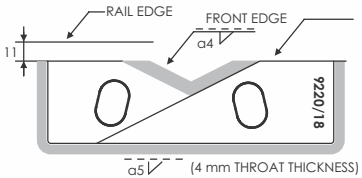

- فاصله بین کلمپ ها بر اساس ماکزیمم نیروهای جانبی حداقل۴۰ سانتی متر و حداکثر ۶۰ سانتی متر توصیه می گردد.
- ارتفاع لبه لاستیکی با توجه به نوع ریل توسط سازنده تعیین می گردد.
- کلیه محصولات شرکت یزد استیل به مدت ۱۸ ماه، از زمان نصب تحت شرایط استاندارد دارای گارانتی می باشند.

- The distance between the clamps is recommended to be at least 40 cm and at most 60 cm based on the maximum lateral forces.
- The height of the rubber edge is determined by the manufacturer according to the type of rail.
- All products of YAZDSTEEL Co. are guaranteed for 18 months from the time of installation under standard conditions.

9220/18 | Gantrail Welded base fixing YAZD/TEEL

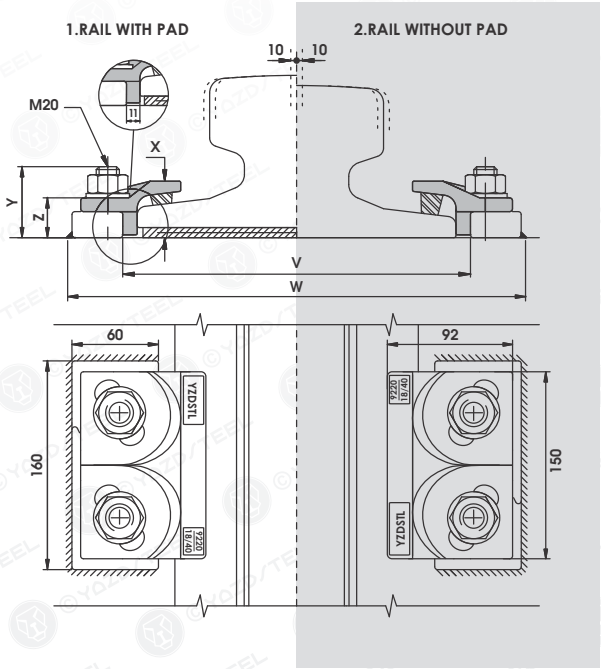

TYPE 9220/18

The **(GANTRAIL DESIGN)** 9220/18 adjustable crane rail clip is designed to fix the largest rails in the most arduous applications, it can withstand a horizontal from the rail of 200KN (20.4 tonnes) its low profile allows it to be used with cranes which are fitted with guide rollers.

The clip can be use for rail type : A100, A120 A150 , CR100, MRS87, CR164 , MRS125 171CRANF , QU120...

Min. assembly width-W = Rail width (F)+140mm V = Rail width(F)+22mm
20mm HORIZONTAL RAIL ADJUSTMENT

DIMENSION (mm):

REF NO.	X (mm)	Y (mm)	Z (mm)	WEIGHT (Kg)	Side Load Max(KN)	Tightening Torque N/M
9220/18/40	40	57	33	2.48	200	250
9220/18/45	45	57	33	2.50	200	250

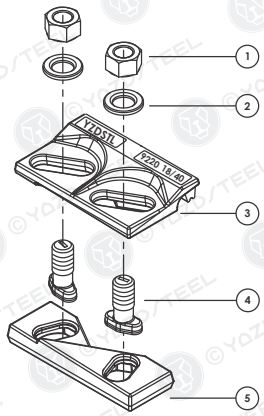

SPECIFICATIONS:
MAX SIDE LOAD 200kN
15mm HORIZONTAL RAIL ADJUSTMENT

FEATURES:
- The two main parts are locked together on tightening the grade 8.8 bolt.
- The clip has a self-tightening mechanism.
- A special vulcanized rubber block applies a controlled force to the rail.

COMPONENTS :
1 - M20 NUT Cl.8
2 - M20 hardened flat washer DIN6919
3 - Upper part material: ductile cast iron ASTM A536
4 - M20 T head bolt 8.8
5 - Lower part material: forged steel AISI 1030

CLIP SELECTION FOR EACH RAIL

	F (mm)	C (mm)	A (mm)	1.CLIP REFERENCE FOR RAIL WITH PAD	2.CLIP REFERENCE FOR RAIL WITHOUT PAD
A100	200	100	95	9220/20/40	9220/20/40
A120	220	120	105	9220/20/40	9220/20/40
A150	220	150	150	9220/20/45	9220/20/40
89Kg CR	178	102	114	9220/20/45	9220/20/40
164 Kg CR	230	140	150	9220/20/61	9220/20/52
MRS86	165	102	102	9220/20/40	9220/20/40
MRS87A (PRI85R)	152	102	152	9220/20/45	9220/20/40
MRS125	180	120	180	9220/20/52	9220/20/45
MRS221	220	220	160	9220/20/45	9220/20/40
ISCR100	150	102	150	9220/20/40	9220/20/40
ISCR120	170	120	170	9220/20/45	9220/20/45
QU100	150	100	150	9220/20/40	9220/20/40
QU120	170	120	170	9220/20/45	9220/20/40
CR73	140	100	135	9220/20/40	9220/20/40
CR100	155	120	150	9220/20/45	9220/20/40

This clip can be used for a wider selection of rails than illustrated.
All rails can be fastened with bolted or welded base clips.

INSTALLATION INSTRUCTIONS

Weld along back and sides of clip base with a 6mm throat thickness fillet weld. Weld in 'V' with a 6mm throat thickness fillet weld. Use low hydrogen electrodes.
If a continuous weld around the clip base is required, this is possible.
TIGHTENING TORQUE 250Nm

WELD DETAIL

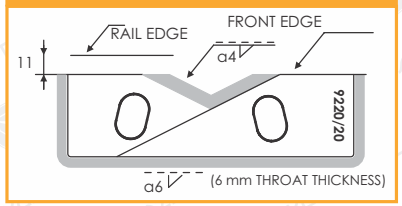

• فاصله بین کلمپ ها بر اساس ماکزیمم نیروهای جانبی حداقل۴۰ سانتی متر و حداکثر ۶۰ سانتی متر توصیه می گردد.
• ارتفاع لبه لاستیکی با توجه به نوع ریل توسط سازنده تعیین می گردد.
• کلیه محصولات شرکت یزد استیل به مدت ۱۸ ماه، از زمان نصب تحت شرایط استاندارد دارای گارانتی می باشند.

• The distance between the clamps is recommended to be at least 40 cm and at most 60 cm based on the maximum lateral forces.
• The height of the rubber edge is determined by the manufacturer according to the type of rail.
• All products of YAZDSTEEL Co. are guaranteed for 18 months from the time of installation under standard conditions.

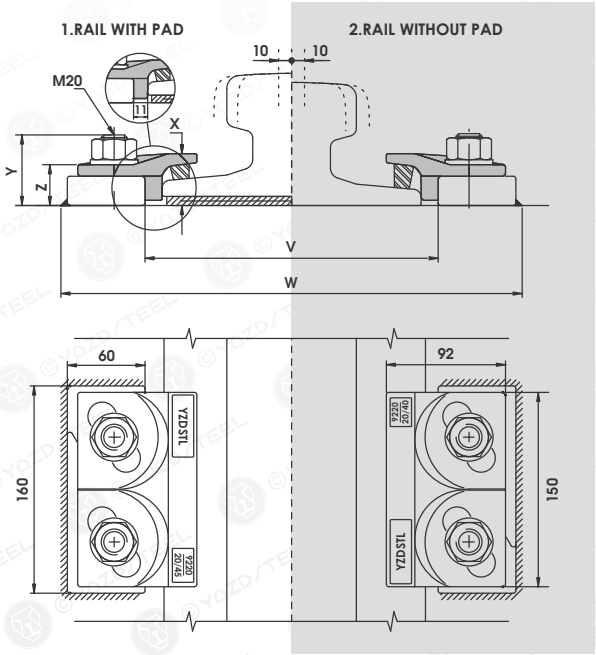

TYPE 9220/20

The **(GANTRAIL DESIGN)** 9220/20 adjustable crane rail clip is designed to fix the largest rails in the most arduous applications, it can withstand a horizontal from the rail of 200KN (20.4 tonnes) its low profile allows it to be used with cranes which are fitted with guide rollers.
The clip can be use for rail type : A100, A120 A150 , CR100, MRS87, CR164 , MRS125 171CRANF , Qu120...

Min. assembly width - W = Rail width (F) + 160mm V = Rail width (F) + 22mm

DIMENSION (mm):

REF NO.	X (mm)	Y FULL NUT (mm)	Y THIN NUT (mm)	Z (mm)	WEIGHT (Kg)	Side Load Max (KN)	Tightening Torque N/M
9220/20/40	40	57	49	33	2.48	235	250
9220/20/45	45	57	49	33	2.50	235	250
9220/20/52	52	57	49	33	2.62	235	250
9220/20/61	61	67	N/A	43	3.10	235	250

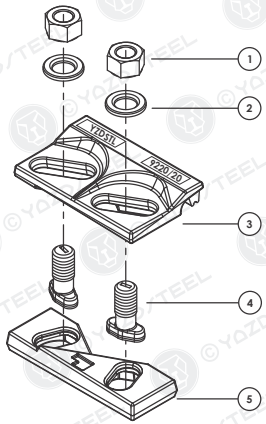

SPECIFICATIONS:
MAX SIDE LOAD 235kN
20mm HORIZONTAL RAIL ADJUSTMENT

FEATURES:
- The proven design has been used successfully for many years throughout the world.
- The clip is welded to the rail support. No access is required from below.
- The two main parts are locked together on tightening the grade 8.8 bolt.
- The clip has a self-tighteningmechanism.
- A special vulcanized rubber block applies a controlled force to the rail.

COMPONENTS :
1 - M20 NUT Cl.8
2 - M20 hardened flat washer DIN6919
3 - Upper part material: ductile cast iron ASTM A536
4 - M20 T head bolt 8.8
5 - Lower part material: forged steel AISI 1030

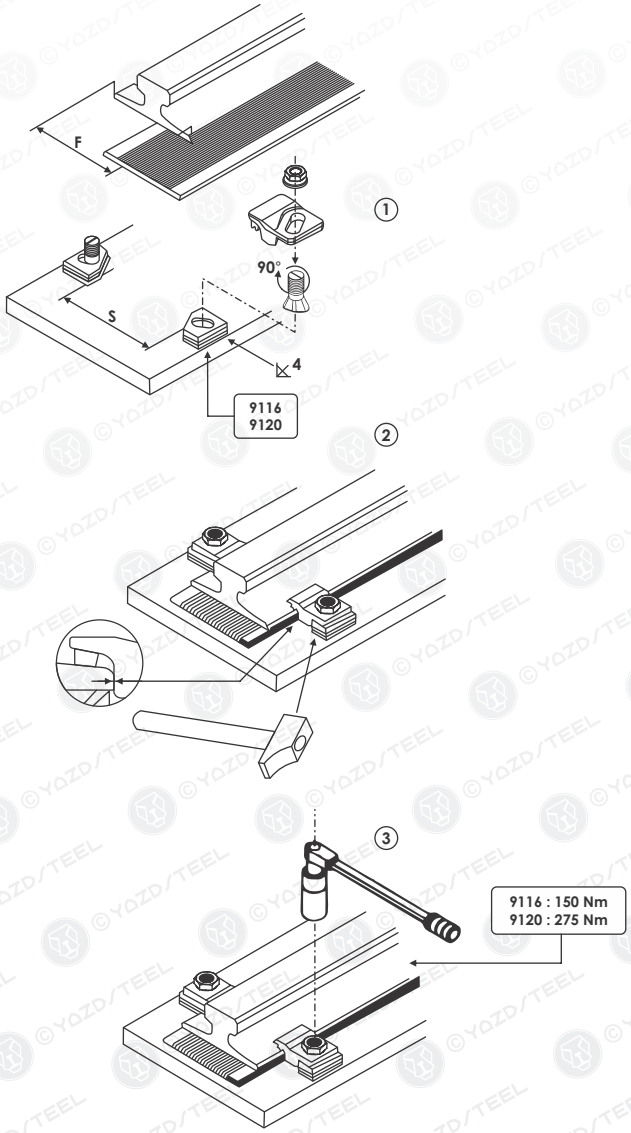

YAZD/TEEL INSTALLATION GUIDE | Gantrail Welded base fixing

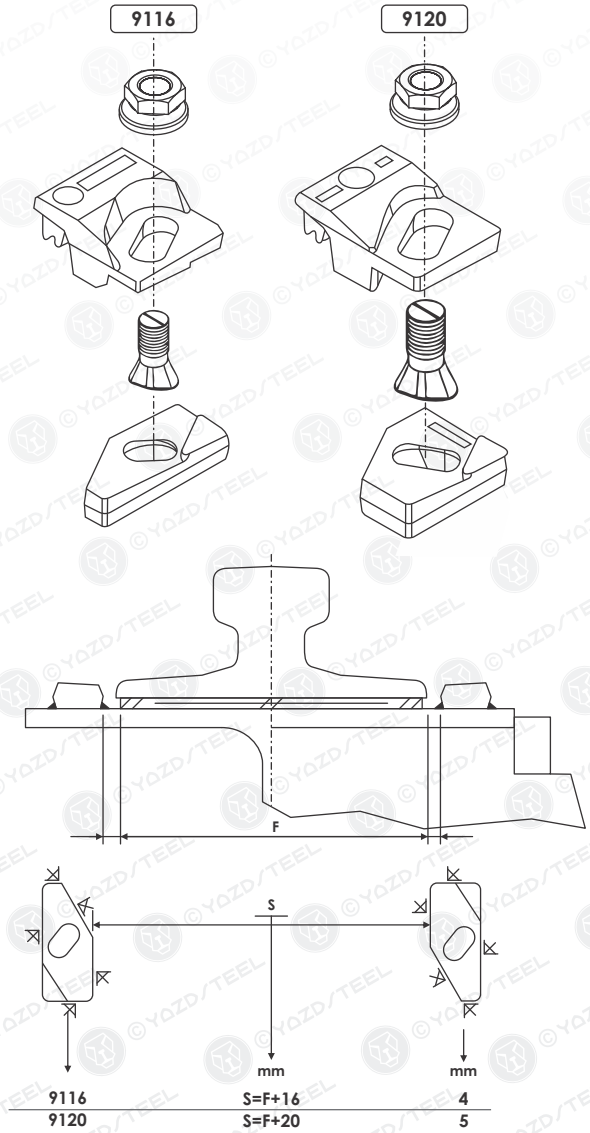

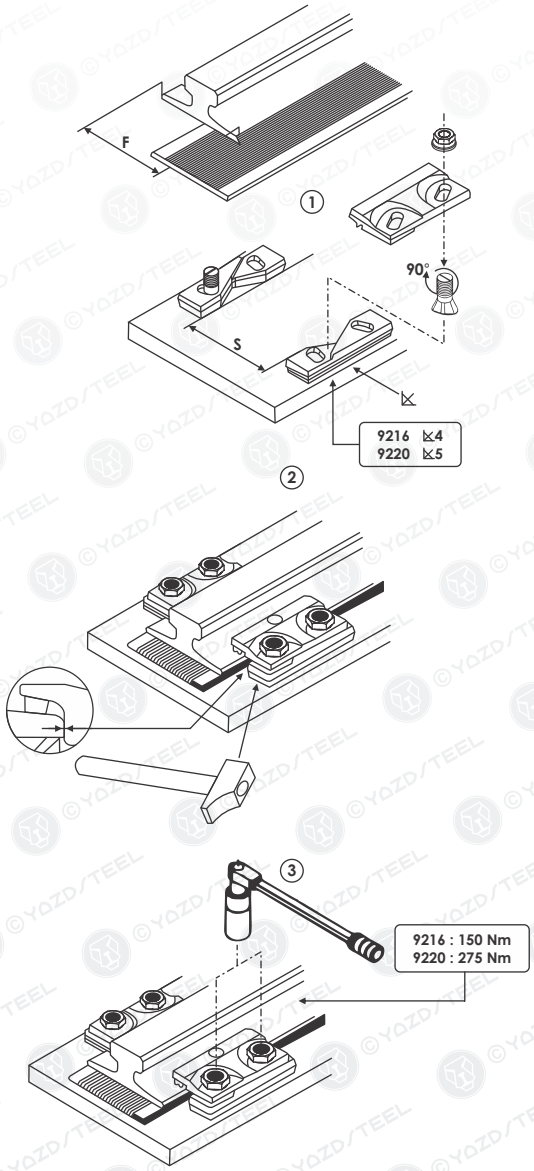

INSTALLATION GUIDE | Gantrail Welded base fixing YAZD/TEEL

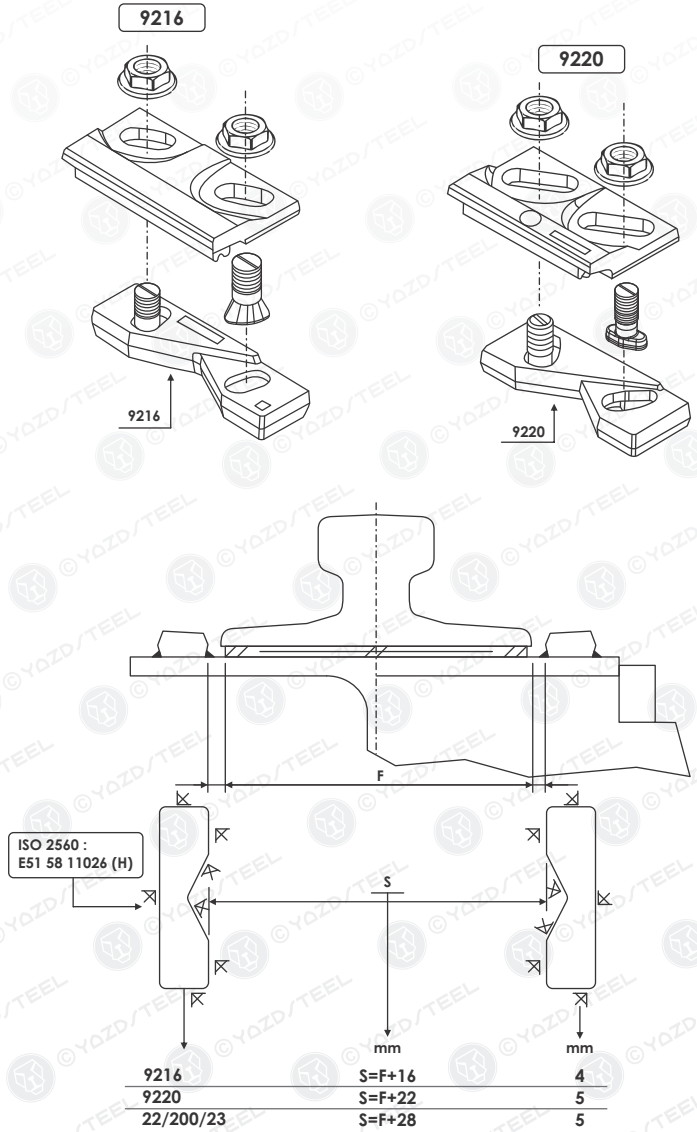

9216	S=F+16	4
9220	S=F+22	5
22/200/23	S=F+28	5

CLIP SELECTION FOR EACH RAIL

	F (mm)	C (mm)	A (mm)	1.CLIP REFERENCE FOR RAIL WITH PAD	2.CLIP REFERENCE FOR RAIL WITHOUT PAD
A45	125	45	55	3116/10/32	3116/10/25
A55	150	55	65	3116/10/32	3116/10/25
A65	175	65	75	3116/10/32	3116/10/25
S14	70	38	80	3116/10/32	3116/10/25
S20	82	44	100	3116/10/32	3116/10/25
S30	108	60	108	3116/10/32	3116/10/25
JIS40	122	64	140	3116/10/32	3116/10/25
15kg.m BHP	79	43	79	3116/10/32	3116/10/25
22kg.m BHP	94	51	94	3116/10/32	3116/10/25

THIS CLIP CAN BE USED FOR A WIDER SELECTION OF RAILS THAN ILLUSTRATED:
All rails can be fastened with bolted or welded base clips.

INSTALLATION INSTRUCTIONS:
The hexagon headed fixing bolt can be inserted from above or below the supporting structure – see adjacent configurations. If it is desired to fix the clip with a welded stud, this may be possible.

BOLT CONFIGURATIONS

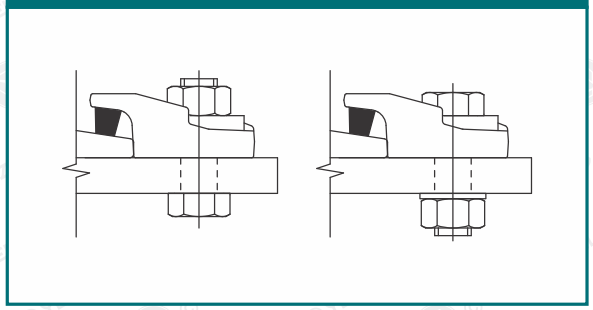

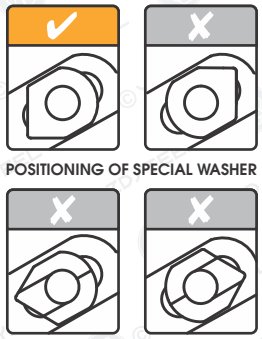

POSITIONING OF SPECIAL WASHER

- فاصله بین کلمپ ها بر اساس ماکزیمم نیروهای جانبی حداقل۴۰ سانتی متر و حداکثر ۶۰ سانتی متر توصیه می گردد.
- ارتفاع لبه لاستیکی با توجه به نوع ریل توسط سازنده تعیین می گردد.
- کلیه محصولات شرکت یزد استیل به مدت ۱۸ ماه، از زمان نصب تحت شرایط استاندارد دارای گارانتی می باشند.

- The distance between the clamps is recommended to be at least 40 cm and at most 60 cm based on the maximum lateral forces.
- The height of the rubber edge is determined by the manufacturer according to the type of rail.
- All products of YAZDSTEEL Co. are guaranteed for 18 months from the time of installation under standard conditions.

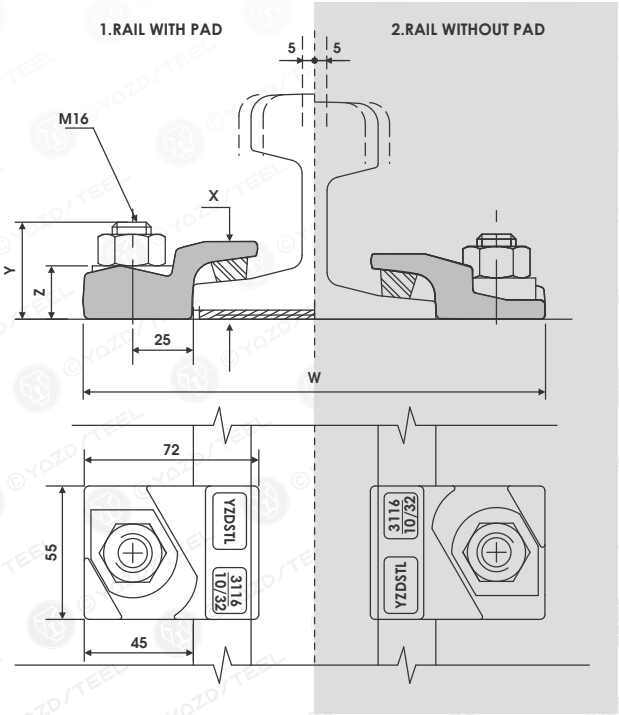

Minimum assembly width - W = Rail width (F) + 100mm

TYPE 3116/10

The **(GANTRAIL DESIGN)** 3116/10 adjustable crane rail clip is designed to fix the largest of rails in the most arduous applications.
It can withstand a horizontal force from the rail of 38KN (3.9 tonnes).
Its low profile allows it to be used with cranes that are fitted with guide rollers.

SPECIFICATIONS:

BOLT GRADE	8.8	10.9
MAX SIDE LOAD (kN)	38	50
BOLT TORQUE (Nm)	200	300

10mm HORIZONTAL RAIL ADJUSTMENT

DIMENSION (mm):

REF NO.	X	Y (FULL NUT)	Y (THIN NUT)	Z	WEIGHT (Kg)
3116/10/25	25	35	30	19	0.32
3116/10/32	32	40	35	26	0.38

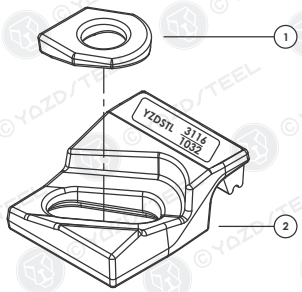

COMPONENTS :
1 - Special washer
2 - Clip with integral rubber block

FEATURES:
- The proven design has been used successfully for many years throughout the world.
- The clip is bolted to the rail support.
- The two main parts are locked together on tightening the nut.
- A special vulcanized rubber block applies a controlled force to the rail.

CLIP SELECTION FOR EACH RAIL

	F (mm)	C (mm)	A (mm)	1.CLIP REFERENCE FOR RAIL WITH PAD	2.CLIP REFERENCE FOR RAIL WITHOUT PAD
A65	175	65	75	3120/15/35	3120/15/35
A75	200	75	85	3120/15/35	3120/15/35
A100	200	100	95	3120/15/35	3120/15/35
S49	125	67	149	3120/15/35	3120/15/35
S54	125	67	154	3120/15/35	3120/15/35
56E1	140	70	159	3120/15/35	3120/15/35
MRS87A (PRI85R)	152	102	152	3120/15/40	3120/15/35
QU70	120	70	120	3120/15/35	3120/15/35
QU80	130	80	130	3120/15/35	3120/15/35
UIC60	150	72	172	3120/15/35	3120/15/35

THIS CLIP CAN BE USED FOR A WIDER SELECTION OF RAILS THAN ILLUSTRATED:
All rails can be fastened with bolted or welded base clips.

INSTALLATION INSTRUCTIONS:
The hexagon headed fixing bolt can be inserted from above or below the supporting structure – see adjacent configurations. If it is desired to fix the clip with a welded stud, this may be possible.

BOLT CONFIGURATIONS

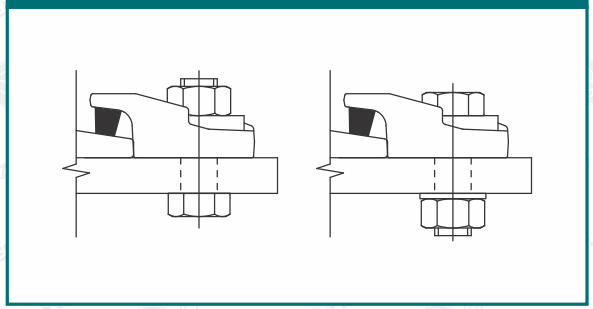

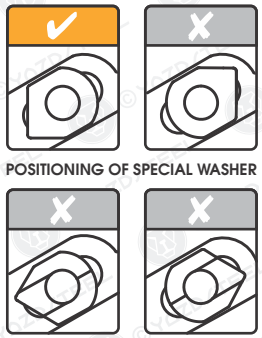

POSITIONING OF SPECIAL WASHER

- فاصله بین کلمپ ها بر اساس ماکزیمم نیروهای جانبی حداقل۴۰ سانتی متر و حداکثر ۶۰ سانتی متر توصیه می گردد.
- ارتفاع لبه لاستیکی با توجه به نوع ریل توسط سازنده تعیین می گردد.
- کلیه محصولات شرکت یزد استیل به مدت ۱۸ ماه، از زمان نصب تحت شرایط استاندارد دارای گارانتی می باشند.

- The distance between the clamps is recommended to be at least 40 cm and at most 60 cm based on the maximum lateral forces.
- The height of the rubber edge is determined by the manufacturer according to the type of rail.
- All products of YAZDSTEEL Co. are guaranteed for 18 months from the time of installation under standard conditions.

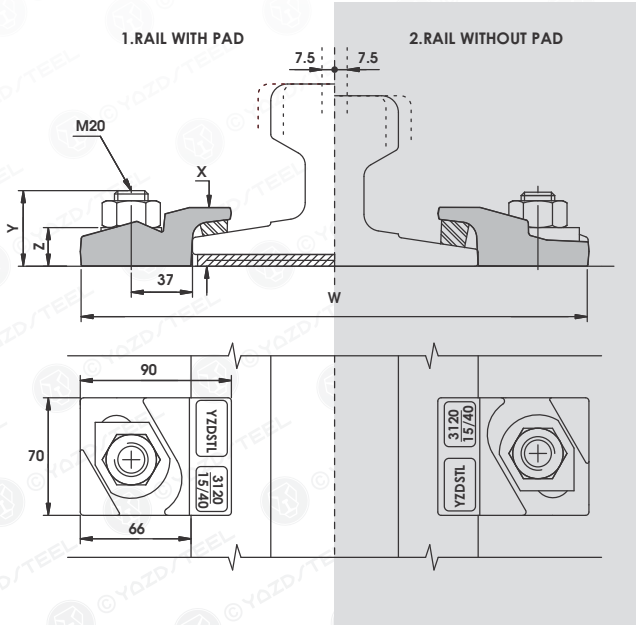

Minimum assembly width - W = Rail width (F) + 147mm

TYPE 3120/15

The **(GANTRAIL DESIGN)** 3120/15 adjustable crane rail clip is designed to fix the largest of rails in the most arduous applications.
It can withstand a horizontal force from the rail of 75KN (7.5 tonnes).
Its low profile allows it to be used with cranes that are fitted with guide rollers.

SPECIFICATIONS:

BOLT GRADE	8.8	10.9
MAX SIDE LOAD (kN)	75	100
BOLT TORQUE (Nm)	390	600

15mm HORIZONTAL RAIL ADJUSTMENT

DIMENSION (mm):

REF NO.	X	Y (FULL NUT)	Y (THIN NUT)	Z	WEIGHT (Kg)
3120/15/35	35	45	40	23	0.70
3120/15/40	40	50	45	30	0.83

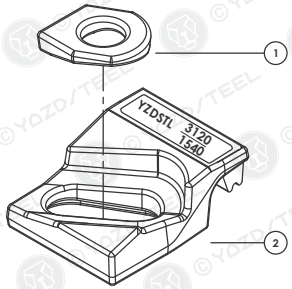

COMPONENTS :
1 - Special washer
2 - Clip with integral rubber block

FEATURES:
- The proven design has been used successfully for many years throughout the world.
- The clip is bolted to the rail support.
- The two main parts are locked together on tightening the nut.
- A special vulcanized rubber block applies a controlled force to the rail.
- Material: DUCTILE CAST IRON ASTM A536

CLIP SELECTION FOR EACH RAIL

	F (mm)	C (mm)	A (mm)	1.CLIP REFERENCE FOR RAIL WITH PAD	2.CLIP REFERENCE FOR RAIL WITHOUT PAD
A100	200	100	95	3124/15/40	3124/15/40
A120	220	120	105	3124/15/40	3124/15/40
A150	220	150	150	3124/15/40	3124/15/40
MRS87A (PRI85R)	152	102	152	3124/15/40	3124/15/40
MRS87B (175CR)	152	102	152	3124/15/40	3124/15/40
MRS125	180	120	180	3124/15/53	3124/15/40
ISCR100	150	102	150	3124/15/40	3124/15/40
ISCR120	170	120	170	3124/15/40	3124/15/40
QU100	150	100	150	3124/15/40	3124/15/40

THIS CLIP CAN BE USED FOR A WIDER SELECTION OF RAILS THAN ILLUSTRATED:
All rails can be fastened with bolted or welded base clips.

INSTALLATION INSTRUCTIONS:
The hexagon headed fixing bolt can be inserted from above or below the supporting structure – see adjacent configurations. If it is desired to fix the clip with a welded stud, this may be possible.

BOLT CONFIGURATIONS

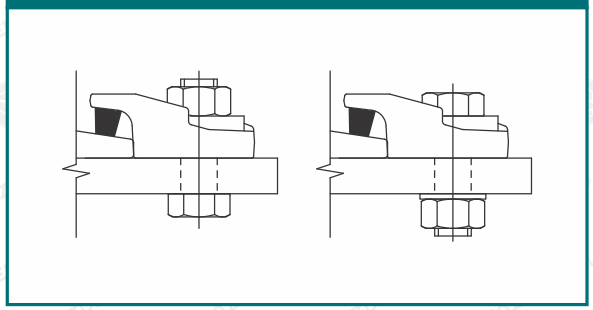

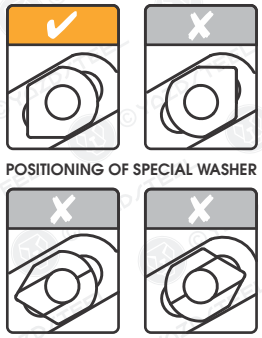

POSITIONING OF SPECIAL WASHER

- فاصله بین کلمپ ها بر اساس ماکزیمم نیروهای جانبی حداقل۴۰ سانتی متر و حداکثر ۶۰ سانتی متر توصیه می گردد.
- ارتفاع لبه لاستیکی با توجه به نوع ریل توسط سازنده تعیین می گردد.
- کلیه محصولات شرکت یزد استیل به مدت ۱۸ ماه، از زمان نصب تحت شرایط استاندارد دارای گارانتی می باشند.

- The distance between the clamps is recommended to be at least 40 cm and at most 60 cm based on the maximum lateral forces.
- The height of the rubber edge is determined by the manufacturer according to the type of rail.
- All products of YAZDSTEEL Co. are guaranteed for 18 months from the time of installation under standard conditions.

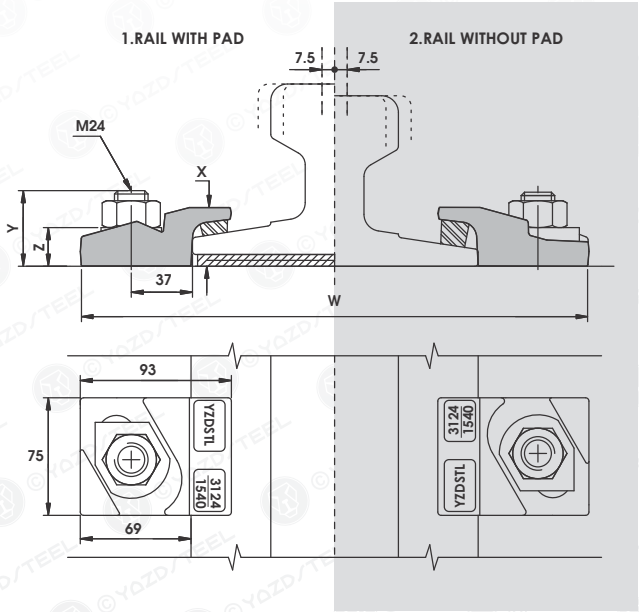

Minimum assembly width - W = Rail width (F) + 150mm

TYPE 3124/15

The **(GANTRAIL DESIGN)** 3124/15 adjustable crane rail clip is designed to fix the largest of rails in the most arduous applications.
It can withstand a horizontal force from the rail of 125KN (12.7 tonnes).
Its low profile allows it to be used with cranes that are fitted with guide rollers.

SPECIFICATIONS:

BOLT GRADE	8.8	10.9
MAX SIDE LOAD (kN)	125	140
BOLT TORQUE (Nm)	600	750

15mm HORIZONTAL RAIL ADJUSTMENT

DIMENSION (mm):

REF NO.	X	Y (FULL NUT)	Y (THIN NUT)	Z	WEIGHT (Kg)
3124/15/40	40	55	45	30	0.73
3124/15/53	53	55	45	30	0.82

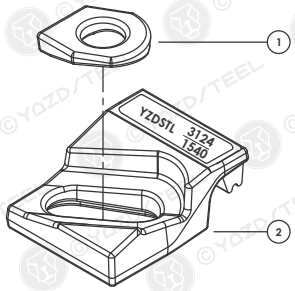

COMPONENTS :
1 - Special washer
2 - Clip with integral rubber block

FEATURES:
- The proven design has been used successfully for many years throughout the world.
- The clip is bolted to the rail support.
- The two main parts are locked together on tightening the nut.
- A special vulcanized rubber block applies a controlled force to the rail.
- Material: DUCTILE CAST IRON ASTM A536

CLIP SELECTION FOR EACH RAIL

	F (mm)	C (mm)	A (mm)	1.CLIP REFERENCE FOR RAIL WITH PAD	2.CLIP REFERENCE FOR RAIL WITHOUT PAD
A120	220	120	105	3224/20/42	3224/20/42
A150	220	150	150	3224/20/42	3224/20/42
MRS86	165	102	102	3224/20/42	3224/20/42
MRS87A (PRI5R)	152	102	152	3224/20/42	3224/20/42
MRS125	180	120	180	3224/20/57	3224/20/42
ISCR100	150	102	150	3224/20/42	3224/20/42
ISCR120	170	120	170	3224/20/42	3224/20/42
ISCR140	170	140	170	3224/20/57	3224/20/42
QU100	150	100	150	3224/20/42	3224/20/42
QU120	170	120	170	3224/20/42	3224/20/42
CR73	140	100	135	3224/20/42	3224/20/42
86Kg AS	165	102	102	3224/20/42	3224/20/42

THIS CLIP CAN BE USED FOR A WIDER SELECTION OF RAILS THAN ILLUSTRATED:
All rails can be fastened with bolted or welded base clips.

INSTALLATION INSTRUCTIONS :
The hexagon headed fixing bolt can be inserted from above or below the supporting structure – see adjacent configurations. If it is desired to fix the clip with a welded stud, this may be possible.

BOLT CONFIGURATIONS

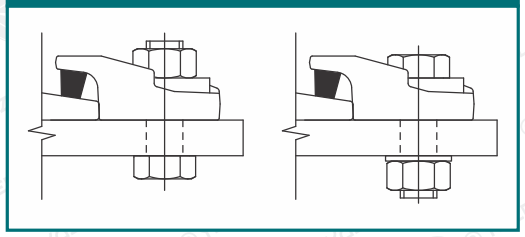

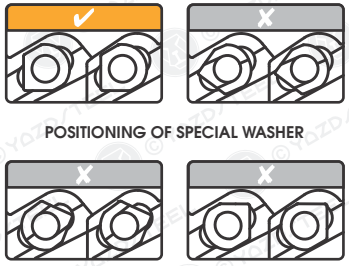

POSITIONING OF SPECIAL WASHER

- فاصله بین کلمپ ها بر اساس ماکزیمم نیروهای جانبی حداقل۴۰ سانتی متر و حداکثر ۶۰ سانتی متر توصیه می گردد.
- ارتفاع لبه لاستیکی با توجه به نوع ریل توسط سازنده تعیین می گردد.
- کلیه محصولات شرکت یزد استیل به مدت ۱۸ ماه، از زمان نصب تحت شرایط استاندارد دارای گارانتی می باشند.

- The distance between the clamps is recommended to be at least 40 cm and at most 60 cm based on the maximum lateral forces.
- The height of the rubber edge is determined by the manufacturer according to the type of rail.
- All products of YAZDSTEEL Co. are guaranteed for 18 months from the time of installation under standard conditions.

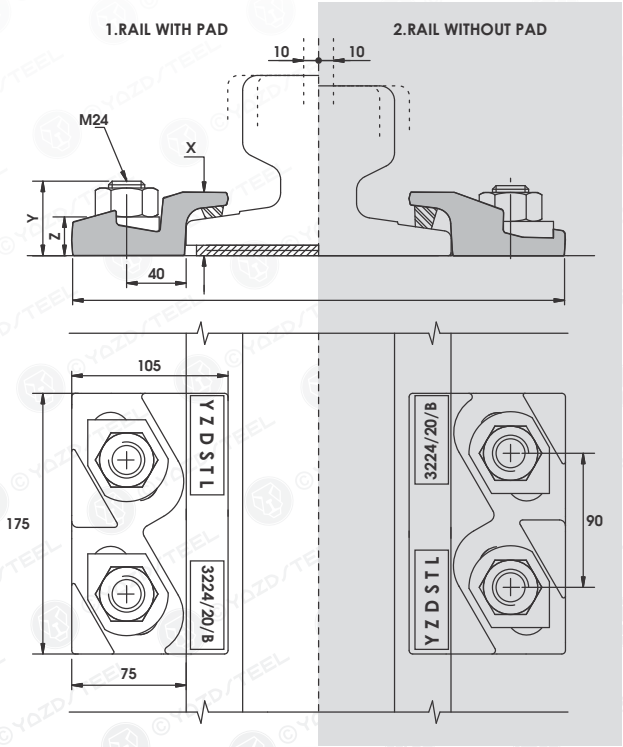

Minimum assembly width - W = Rail width (F) + 170mm

TYPE 3224/20

The **(GANTRAIL DESIGN)** 3224/20 adjustable crane rail clip is designed to fix the largest of rails in the most arduous applications.
It can withstand a horizontal force from the rail of 250KN (25.5 tonnes).
Its low profile allows it to be used with cranes that are fitted with guide rollers.

SPECIFICATIONS:

BOLT GRADE	8.8	10.9
MAX SIDE LOAD (kN)	250	350
BOLT TORQUE (Nm)	600	750

20mm HORIZONTAL RAIL ADJUSTMENT

DIMENSION (mm):

REF NO.	X	Y (FULL NUT)	Y (THIN NUT)	Z	WEIGHT (Kg)
3224/20/42	42	50	40	26	2.10
3224/20/57	57	50	40	26	2.45

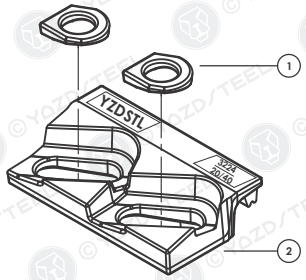

SPECIFICATIONS:
MAX SIDE LOAD using Grade 8.8 bolt 250kN
15mm HORIZONTAL RAIL ADJUSTMENT

COMPONENTS :
1 - Special washer
2 - Clip with integral rubber block

FEATURES:
- The proven design has been used successfully for many years throughout the world.
- The clip is bolted to the rail support.
- The two main parts are locked together on tightening the nut.
- A special vulcanized rubber block applies a controlled force to the rail.
- Material: DUCTILE CAST IRON ASTM A536

CLIP SELECTION FOR EACH RAIL

	F (mm)	C (mm)	A (mm)	1.CLIP REFERENCE FOR RAIL WITH PAD	2.CLIP REFERENCE FOR RAIL WITHOUT PAD
A120	220	120	105	3226/20/42	3226/20/42
A150	220	150	150	3226/20/42	3226/20/42
MRS86	165	102	102	3226/20/42	3226/20/42
MRS87A (PRI5R)	152	102	152	3226/20/42	3226/20/42
MRS125	180	120	180	3226/20/57	3226/20/42
ISCR100	150	102	150	3226/20/42	3226/20/42
ISCR120	170	120	170	3226/20/42	3226/20/42
ISCR140	170	140	170	3226/20/57	3226/20/42
QU100	150	100	150	3226/20/42	3226/20/42
QU120	170	120	170	3226/20/42	3226/20/42
CR73	140	100	135	3226/20/42	3226/20/42
86Kg AS	165	102	102	3226/20/42	3226/20/42

THIS CLIP CAN BE USED FOR A WIDER SELECTION OF RAILS THAN ILLUSTRATED:
All rails can be fastened with bolted or welded base clips.

INSTALLATION INSTRUCTIONS :
The hexagon headed fixing bolt can be inserted from above or below the supporting structure – see adjacent configurations. If it is desired to fix the clip with a welded stud, this may be possible.

BOLT CONFIGURATIONS

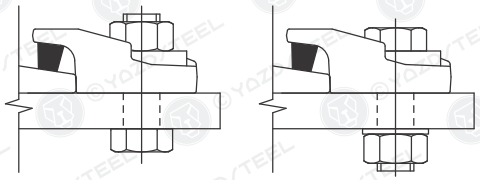

POSITIONING OF SPECIAL WASHER

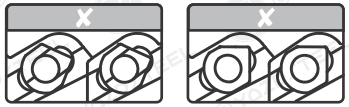

- فاصله بین کلمپ ها بر اساس ماکزیمم نیروهای جانبی حداقل۴۰ سانتی متر و حداکثر ۶۰ سانتی متر توصیه می گردد.
- ارتفاع لبه لاستیکی با توجه به نوع ریل توسط سازنده تعیین می گردد.
- کلیه محصولات شرکت یزد استیل به مدت ۱۸ ماه، از زمان نصب تحت شرایط استاندارد دارای گارانتی می باشند.

- The distance between the clamps is recommended to be at least 40 cm and at most 60 cm based on the maximum lateral forces.
- The height of the rubber edge is determined by the manufacturer according to the type of rail.
- All products of YAZDSTEEL Co. are guaranteed for 18 months from the time of installation under standard conditions.

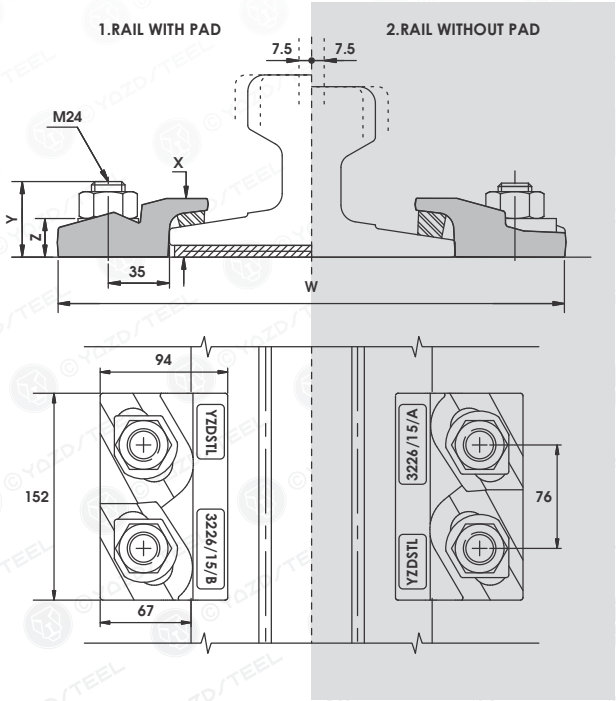

Minimum assembly width - W = Rail width (F) + 150mm

TYPE 3226/15

The **(GANTRAIL DESIGN)** 3226/15 adjustable crane rail clip is designed to fix the largest of rails in the most arduous applications.
It can withstand a horizontal force from the rail of 250KN (25.5 tonnes).
Its low profile allows it to be used with cranes that are fitted with guide rollers.

SPECIFICATIONS:

BOLT GRADE	8.8	10.9
MAX SIDE LOAD (kN)	250	350
BOLT TORQUE (Nm)	600	750

15mm HORIZONTAL RAIL ADJUSTMENT

DIMENSION (mm):

REF NO.	X	Y (FULL NUT)	Y (THIN NUT)	Z	WEIGHT (Kg)
3226/15/40	40	55	45	30	1.50

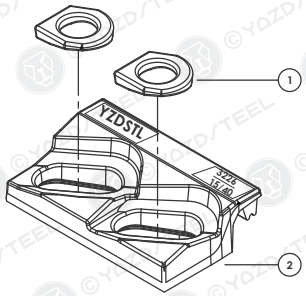

SPECIFICATIONS:
MAX SIDE LOAD using Grade 8.8 bolt 250kN
15mm HORIZONTAL RAIL ADJUSTMENT

COMPONENTS :
1 - Special washer
2 - Clip with integral rubber block

FEATURES:
- The proven design has been used successfully for many years throughout the world.
- The clip is bolted to the rail support.
- The two main parts are locked together on tightening the nut.
- A special vulcanized rubber block applies a controlled force to the rail.
- Material: DUCTILE CAST IRON ASTM A536

Figure 7

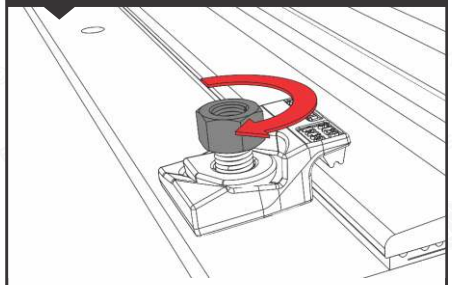

Run nut(s) down bolt(s).

Figure 8

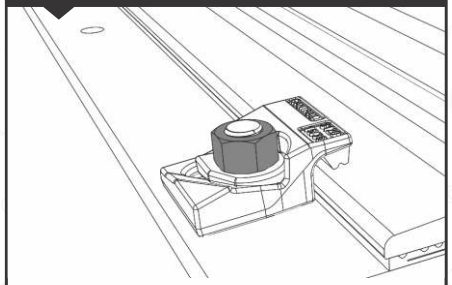

Nut(s) to make contact with special washer(s).

Figure 9

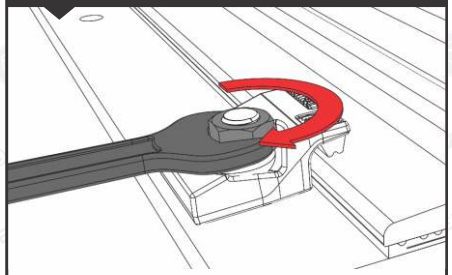

Tighten nut(s) with spanner.

Figure 10

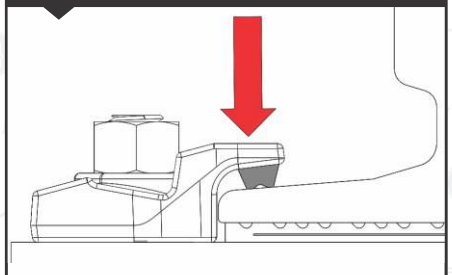

Tighten only until rubber 'nose' is compressed and bottom surface of clip is in full metal-to-metal contact with rail support.
Do not apply full torque yet.

Figure 11

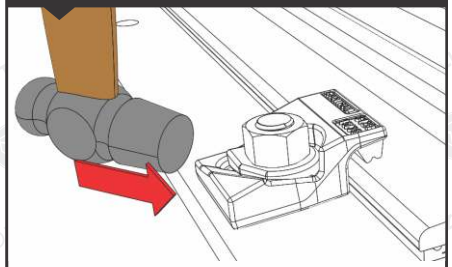

With hammer of about 1 kilo, tap clip body towards rail along direction of slot(s) in clip.

Figure 12

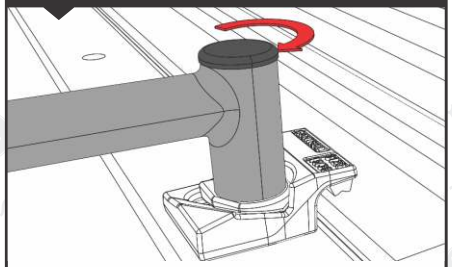

Tighten nut(s) to required torque given on product datasheet.

Figure 1

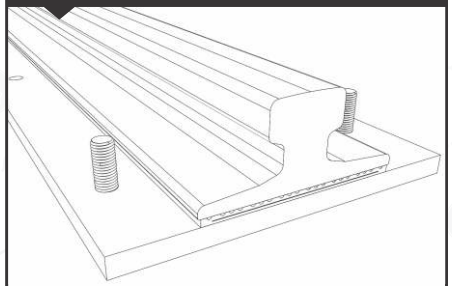

Insert bolt(s) through hole(s) in rail supporting structure.

Figure 2

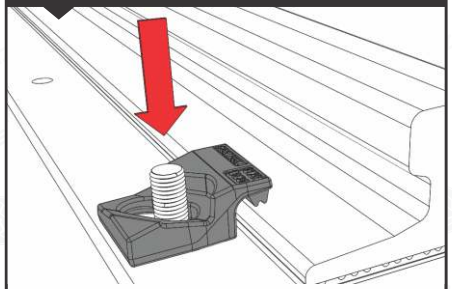

Place body of clip over bolt(s) with rubber 'nose' resting on upper surface of bottom flange of rail.

Figure 3

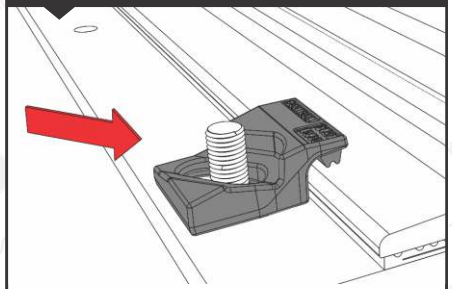

Move clip into metal-to-metal contact with bottom edge of rail.

Figure 4

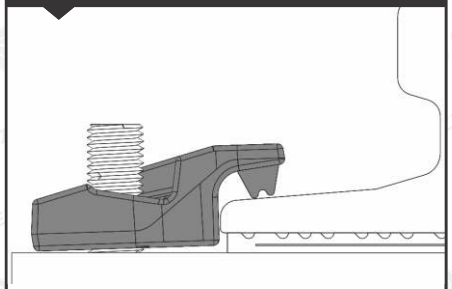

Bottom face of clip will not be in full contact with rail support.

Figure 5

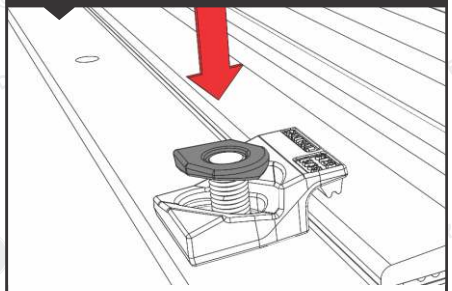

Place special washer(s) over bolt(s).

Figure 6

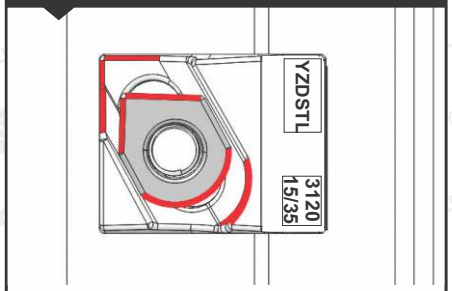

Make sure special washer(s) is fitted correctly with square corner to back and flat surface upwards.

CLIP SELECTION FOR EACH RAIL

	F (mm)	K (mm)	H (mm)	Weight (kg/m)	Mounting with 7mm RailLok™ Pad	Mounting without 7mm RailLok™ Pad
A65	175.0	65.0	75.0	43.10	41/075/BJ	41/075/AJ
A75	200.0	75.0	85.0	56.20	41/075/BJ	41/075/AI
A100	200.0	100.0	95.0	74.30	41/075/BI	41/075/AI
A120	220.0	120.0	105.0	100.00	41/075/CJ	41/075/BM
A150	220.0	150.0	150.0	150.30	41/075/CI	41/075/BJ
MRS85 (171 CR)	152.4	101.6	152.4	84.83	41/075/CI	41/075/BJ
MRS87A (PRI 85R)	152.4	101.6	152.4	86.80	41/075/CI	41/075/BJ
MRS87B (175 CR)	152.4	102.4	152.4	86.80	41/075/CJ	41/075/BM
S49	125.0	67.0	149.0	49.43	41/075/BI	41/075/AI
S54	125.0	67.0	154.0	54.54	41/075/CM	41/075/BM
S64	150.0	74.0	172.0	64.92	41/075/CM	41/075/BM
UIC54	140.0	70.0	159.0	54.43	41/075/BI	41/075/AI
UIC60	150.0	72.0	172.0	60.34	41/075/BI	41/075/AI

Note: For more rails please contact Us. (1-1)

Clips	C max	Tightening torque			Est'd weight
–	mm	Bolt or screw grade			–
		4.6	5.6	8.8	
41/075/AN 41/075/BN 41/075/CN	28 35 40	150	200	400	0.580 0.600 0.630
Admissible side load (kN)		30	40	75	–

Note: nose height , not compressed , adapted to the rail type (see table overleaf). (1-2)

• فاصله بین کلمپ ها بر اساس ماکزیمم نیروهای جانبی حداقل۴۰ سانتی متر و حداکثر ۶۰ سانتی متر توصیه می گردد.
• ارتفاع لبه لاستیکی با توجه به نوع ریل توسط سازنده تعیین می گردد.
• کلیه محصولات شرکت یزد استیل به مدت ۱۸ ماه، از زمان نصب تحت شرایط استاندارد دارای گارانتی می باشند.

•The distance between the clamps is recommended to be at least 40 cm and at most 60 cm based on the maximum lateral forces.
• The height of the rubber edge is determined by the manufacturer according to the type of rail.
• All products of YAZDSTEEL Co. are guaranteed for 18 months from the time of installation under standard conditions.

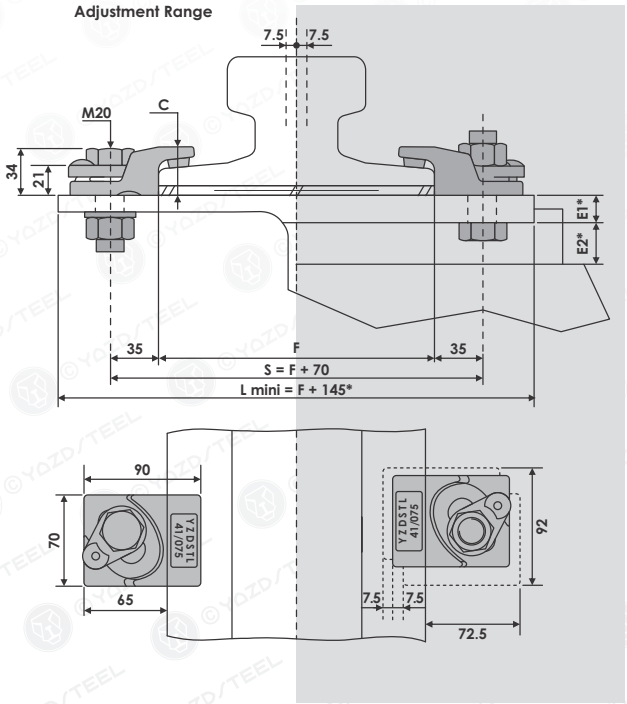

TYPE 41/075

The **(GANTREX DESIGN)** 41/075 adjustable crane rail clip is designed to fix heavy rails in the most arduous applications, it can Withstand a horizontal force from the rail. **The clip can be use for rail type: A65, A100 A120, A150 , etc .**

Full designation
41/075/AN or 41/075/BN or 41/075/CN

Components	
① 1x	41/075/R
② 1x	41/075/28/N or 41/075/35/N or 41/075/40/N

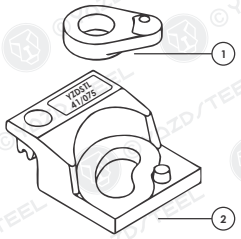

COMPONENTS :
1 - Special washer
2 - Clip with integral rubber block

FEATURES:
• The proven design has been used successfully for many years throughout the world.
• The clip is bolted to the rail support. The two main parts are locked together on tightening the nut.
• A special vulcanized rubber block applies a controlled force to the rail.

41/125 | Gantrail Boltable Rail Fixing YAZD/TEEL

CLIP SELECTION FOR EACH RAIL

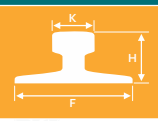	F (mm)	K (mm)	H (mm)	Weight (kg/m)	Mounting with 7mm RailLok™ Pad	Mounting without 7mm RailLok™ Pad
A65	175.0	65.0	75.0	43.10	41/125/BJ	–
A75	200.0	75.0	85.0	56.20	41/125/BJ	–
A100	200.0	100.0	95.0	74.30	41/125/BI	–
A120	220.0	120.0	105.0	100.00	41/125/CJ	41/125/BM
A150	220.0	150.0	150.0	150.30	41/125/CI	41/125/BJ
MRS87A (PRI 85R)	152.4	101.6	152.4	86.80	41/125/CH	41/125/BJ
MRS87B (175 CR)	152.4	102.4	152.4	86.80	41/125/CJ	41/125/BM
S49	125.0	67.0	149.0	49.43	41/125/BI	–
S54	125.0	67.0	154.0	54.54	41/125/CM	41/125/BM
S64	150.0	74.0	172.0	64.92	41/125/CM	41/125/BM
UIC54	131.8	65.1	131.8	42.16	41/125/BI	–
UIC60	140.0	72.0	151.0	50.10	41/125/BI	–
JIS50N	165.0	100.0	155.0	100.38	41/125/BI	–
JIS60	139.7	69.9	158.8	56.40	41/125/CJ	41/125/BM
CR73	122.2	62.7	122.2	37.20	41/125/CJ	41/125/BJ
CR100	122.0	64.0	140.0	40.90	41/125/CH	41/125/BI

Note: For more rails please contact Us. (1-1)

Clips	C max	Tightening torque			Est'd weight
–	mm	Bolt or screw grade			–
		4.6	5.6	8.8	
41/125/BN 41/125/CN 41/125/DN	35 40 46	250	300	660	0.600 0.640 0.680
Admissible side load (kN)		50	60	125	–

Note: For mounting on concrete + metallic plate , please contact us. (1-2)

- فاصله بین کلمپ ها بر اساس ماکزیمم نیروهای جانبی حداقل۴۰ سانتی متر و حداکثر ۶۰ سانتی متر توصیه می گردد.
- ارتفاع لبه لاستیکی با توجه به نوع ریل توسط سازنده تعیین می گردد.
- کلیه محصولات شرکت یزد استیل به مدت ۱۸ ماه، از زمان نصب تحت شرایط استاندارد دارای گارانتی می باشند.

- The distance between the clamps is recommended to be at least 40 cm and at most 60 cm based on the maximum lateral forces.
- The height of the rubber edge is determined by the manufacturer according to the type of rail.
- All products of YAZDSTEEL Co. are guaranteed for 18 months from the time of installation under standard conditions.

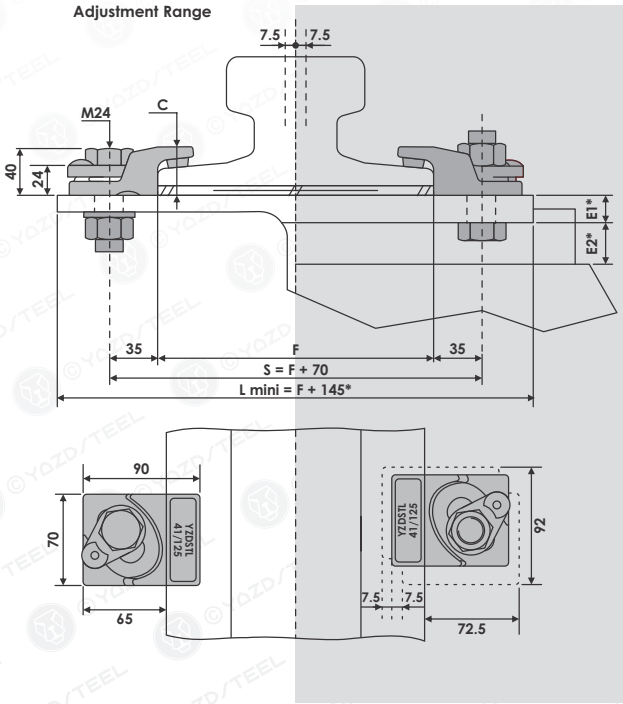

TYPE 41/125

The **(GANTREX DESIGN)** 41/125 adjustable crane rail clip is designed to fix heavy rails in the most arduous applications , it can Withstand a horizontal force from the rail to use bolt grade in next table depended with 15mm lateral adjustment.
the clip can be use for rail type: A65, A100 A120 , A150 and similar Rails , etc .

Full designation
41/125/BN or 41/125/CN or 41/125/DN
Components
① 1x 41/125/R
② 1x 41/125/35/N or 41/125/40/N or 41/125/46/N

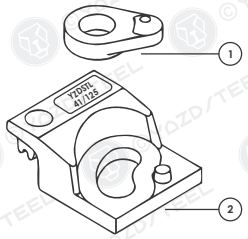

COMPONENTS :
1 - Special washer
2 - Clip with integral rubber block

FEATURES:
- The proven design has been used successfully for many years throughout the world.
- The clip is bolted to the rail support. The two main parts are locked together on tightening the nut.
- A special vulcanized rubber block applies a controlled force to the rail.

CLIP SELECTION TABLE

	F (mm)	K (mm)	H (mm)	Weight (kg/m)	Mounting with 7mm RailLok™ Pad	Mounting without 7mm RailLok™ Pad
A45	125.0	45.0	55.0	22.10	W10/BH	W10/AJ
A55	150.0	55.0	65.0	31.80	W10/CJ	W10/AJ
A65	175.0	65.0	75.0	43.10	W10/CJ	W10/AI
A75	200.0	75.0	85.0	56.20	W10/CI	W10/AH
P43	131.8	70.0	140.0	44.65	W10/CI	W10/BJ
QU80	130.0	80.0	130.0	63.69	W10/CI	W10/BJ
S20	82.0	44.0	100.0	19.80	W10/BH	W10/AJ
S24	90.0	53.0	115.0	24.40	W10/BI	W10/AJ
S30	108.0	60.3	108.0	30.03	W10/CJ	W10/AJ
60E1 (UIC60)	150.0	72.0	172.0	60.21	W10/CI	W10/BJ

Note: For more rails please contact Yazd Steel.

INSTALLATION AND SUGGESTED WELD INSTRUCTIONS:

The lower component is welded on the support parallel to the axis of the rail and the upper component is fastened to it by means of one bolt and nut. The recommended torque is 75 Nm. Electrical and pneumatic torque wrenches are allowed as long as the minimum torque of 60 Nm is met and the torque does not exceed 100 Nm.
It is recommended the torque is regularly controlled with a calibrated torque wrench.

For most applications, the recommended weld throat size is ≤ 4 mm; the weld leg size is then 6 mm. If the pad is not used, the weld along the foot of the rail must be adapted.
Use any low hydrogen rod suitable for use with structural steel: For full instructions on weld size and electrodes, refer to the data sheet "Installation and suggested weld instructions".

Do not apply protective coating on the contact surface between upper and lower components unless accepted by Gantrex. Do not use solvents as they may seriously damage the rubber nose.

INSTALLATION INSTRUCTIONS

- Recommended weld throat size :
≤ 4mm; weld leg size being then 6mm.
- Any low hydrogen rod suitable for use with structural steel may be used.

ISO2560 type E42 5 B 32 H5, E7018 or equivalent.

WELD DETAIL

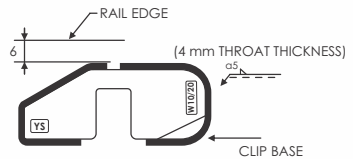

• فاصله بین کلمپ ها بر اساس ماکزیمم نیروهای جانبی حداقل۴۰ سانتی متر و حداکثر ۶۰ سانتی متر توصیه می گردد.
• ارتفاع لبه لاستیکی با توجه به نوع ریل توسط سازنده تعیین می گردد.
• کلیه محصولات شرکت یزد استیل به مدت ۱۸ ماه، از زمان نصب تحت شرایط استاندارد دارای گارانتی می باشند.

•The distance between the clamps is recommended to be at least 40 cm and at most 60 cm based on the maximum lateral forces.
• The height of the rubber edge is determined by the manufacturer according to the type of rail.
• All products of YAZDSTEEL Co. are guaranteed for 18 months from the time of installation under standard conditions.

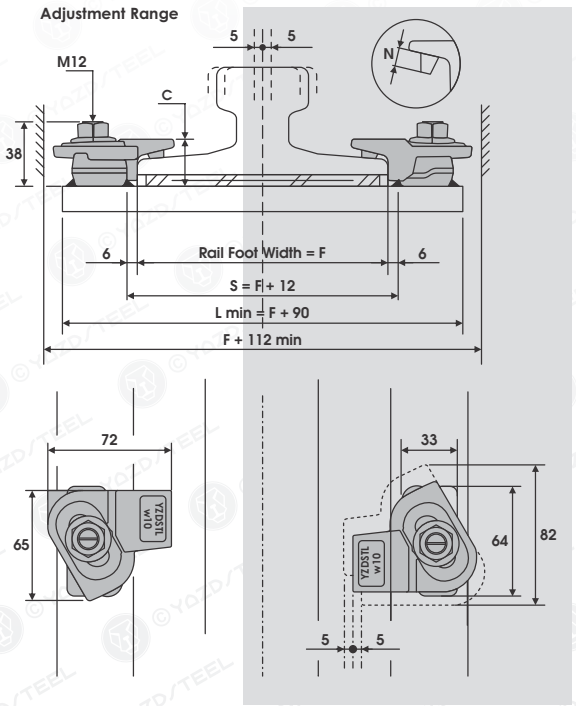

TYPE W10

The **(GANTREX DESIGN)** W10/20 adjustable crane rail clip is designed to fix heavy rails in the most arduous applications, it can Withstand a horizontal force from the rail of 65 KN (6.5 tonnes).
The clip can be use for rail type: A45 , A55 A65 , A75 , etc .

NEW FEATURES:

- Double wedge with patented self.
- Bolts incorporate a square shank base.

COMPONENTS MATERIALS:

The RailLok™ W10 is standard with a weldable forged steel lower component a ductile cast iron upper component and vulcanize-bonded rubber nose.
As standard, the bolts and nuts are hot dip galvanized.
The upper component can also be hot dip galvanized on request.

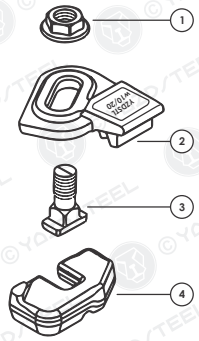

Full designation		
		W10/AN or W10/BN or W10/CN
Full designation		
①	1x	Sp M12 Cl.8
②	1x	W10/22N W10/25N W10/30N
③	1x	SSB M12X30.5 8.8
④	1x	W10/20

CLIPS	C max (mm)	Lateral adjustment (mm)	Bolt Torque (Nm)	Maximum Resistance to lateral forces (*) (kN)	Estimated weight (kg)
W10/AN	24	10	75	65	0.428
W10/BN	29	10	75	65	0.428
W10/CN	33	10	75	65	0.438

CLIP SELECTION TABLE

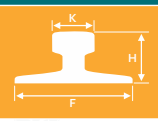	F (mm)	K (mm)	H (mm)	Weight (kg/m)	Mounting	
					with	without
					7mm RailLok™ Pad	
A65	175.0	65.0	75.0	43.10	W15/BJ	W15/AM
A75	200.0	75.0	85.0	56.20	W15/BI	W15/AM
A100	200.0	100.0	95.0	74.30	W15/BH	W15/AJ
A120	220.0	120.0	105.0	100.00	W15/CJ	W15/BM
MRS87B (175 CR)	152.4	102.4	152.4	86.80	W15/CJ	W15/AI
QU80	130.0	100.0	130.0	63.69	W15/BI	W15/AJ
QU100	150.0	67.0	150.0	88.96	W15/CM	W15/AI
S49	125.0	67.0	149.0	49.43	W15/BI	W15/AM
60E1 (UIC 60)	150.0	72.0	172.0	60.21	W15/BI	W15/AJ

* And more Rails with smilar speciafication

INSTALLATION AND SUGGESTED WELD INSTRUCTIONS:

The lower component is welded on the support parallel to the axis of the rail and the upper component is fastened to it by means of one bolt and nut. The recommended torque is 200 Nm. Electrical and pneumatic torque wrenches are allowed as long as the minimum torque of 150 Nm is met and the torque does not exceed 250 Nm.
It is recommended the torque is regularly controlled with a calibrated torque wrench.
For most applications, the recommended weld throat size is ≤ 5 mm; the weld leg size is then 7 mm. If the pad is not used, the weld along the foot of the rail must be adapted.
Use any low hydrogen rod suitable for use with structural steel: For full instructions on weld size and electrodes, refer to the data sheet "Installation and suggested weld instructions".
Do not apply protective coating on the contact surface between upper and lower components unless accepted by Gantrex. Do not use solvents as they may seriously damage the rubber nose.

INSTALLATION INSTRUCTIONS

- Recommended weld throat size : ≤ 5mm; weld leg size being then 7mm.
- Any low hydrogen rod suitable for use with structural steel may be used.

ISO2560 type E42 5 B 32 H5, E7018 or equivalent.

WELD DETAIL

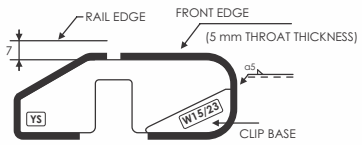

- فاصله بین کلمپ ها بر اساس ماکزیمم نیروهای جانبی حداقل۴۰ سانتی متر و حداکثر ۶۰ سانتی متر توصیه می گردد.
- ارتفاع لبه لاستیکی با توجه به نوع ریل توسط سازنده تعیین می گردد.
- کلیه محصولات شرکت یزد استیل به مدت ۱۸ ماه، از زمان نصب تحت شرایط استاندارد دارای گارانتی می باشند.

- The distance between the clamps is recommended to be at least 40 cm and at most 60 cm based on the maximum lateral forces.
- The height of the rubber edge is determined by the manufacturer according to the type of rail.
- All products of YAZDSTEEL Co. are guaranteed for 18 months from the time of installation under standard conditions.

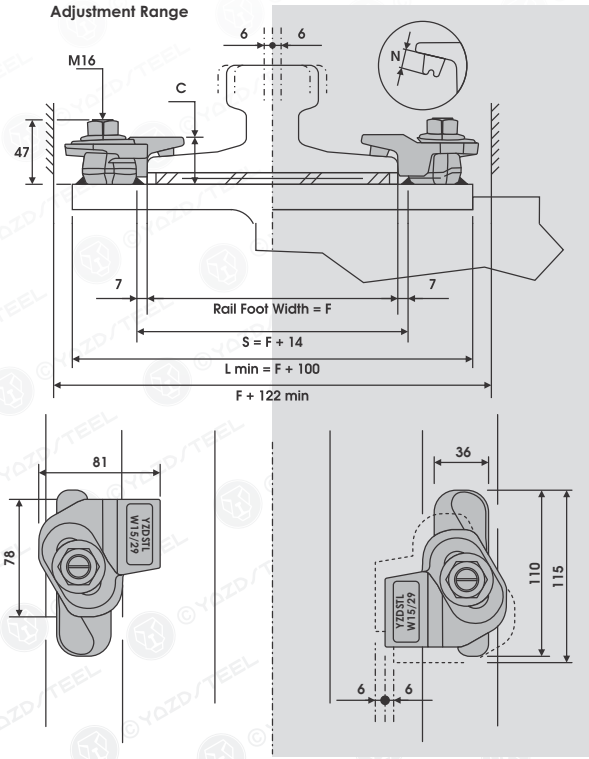

TYPE W15

The **(GANTREX DESIGN)** W15 adjustable crane rail clip is designed to fix heavy rails in the most arduous applications, it can Withstand a horizontal force from the rail of 120 KN (12.5 tonnes).
The clip can be use for rail type: A65 , A75 A100 , A120 , etc .

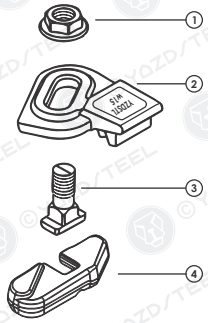

Full designation	
	W15/AN or W15/BN or W15/CN or W15/DN

Full designation		
1	1x	Sp M16 Cl.8
2	1x	W15/28N W15/29N W15/35W W15/39N
3	1x	SSB M16X35 8.8
4	1x	W15/23

COMPONENTS MATERIALS:

The **RailLok™ W15** is standard with a weldable forged steel lower component a ductile cast iron upper component and vulcanize -bonded rubber nose.
As standard, the bolts and nuts are hot dip galvanized.
The upper component can also be hot dip galvanized on request.

CLIPS	C max (mm)	Lateral adjustment (mm)	Bolt Torque (Nm)	Maximum Resistance to lateral forces (*) (kN)	Estimated weight (kg)
W15/AN	30	12	200	120	0.880
W15/BN	34	12	200	120	0.880
W15/CN	41	12	200	120	0.912
W15/DN	45	12	200	120	0.922

CLIP SELECTION FOR EACH RAIL

	F (mm)	K (mm)	H (mm)	Weight (kg/m)	Mounting with 7mm RailLok™ Pad	Mounting without 7mm RailLok™ Pad
A75	200.0	75.0	85.0	56.20	W20/BI	W20/AM
A100	200.0	100.0	95.0	74.30	W20/CJ	W20/AJ
A120	220.0	120.0	105.0	100.00	W20/CI	W20/BM
A150	220.0	150.0	150.0	150.30	W20/CH	W20/BJ
MRS87B (175CR)	152.4	102.4	152.4	86.80	W20/CI	W20/AI
QU80	130.0	80.0	130.0	63.69	W20/CJ	W20/AJ
QU100	150.0	100.0	150.0	88.96	W20/CJ	W20/AI
QU120	170.0	120.0	170.0	118.10	W20/CH	W20/AH

Note: For more rails please contact Yazd Steel.

CLIP SPECIFICATION :

The RailLok™ patented clips are specifically designed to facilitate correct mounting of crane rails:
+ The patented design with inclined bolt ensures tight and full self-contact with the rail foot.
+ Bolts with "Square Shank Base" allow the use of impact-wrenches.
+ Easier installation because of the wider adjustment range.
+ Compact design : fits narrow girders and sole plates, avoid interference with guide rollers. Once installed, the clips are self-locking and self-tightening.

INSTALLATION AND SUGGESTED WELD INSTRUCTIONS :

The lower component is welded on the support parallel to the axis of the rail and the upper component is fastened to it by means of the two bolts and nuts. The recommended torque is 200 Nm.
Electrical and pneumatic torque wrenches are allowed as long as the minimum torque of 150 Nm is met and the torque does not exceed 250 Nm. It is recommended the torque is regularly controlled with a calibrated torque wrench. For most applications, the recommended weld throat size is ⩾5mm; the weld leg size is then 7 mm.
If the pad is not used, the weld along the foot of the rail must be adapted.
Use any low hydrogen rod suitable for use with structural steel:
For full instructions on weld size and electrodes, refer to the data sheet "Installation and suggested weld instructions"
Do not apply protective coating on the contact surface between upper and lower components unless accepted by Gantrex. Do not use solvents as they may seriously damage the rubber nose.

INSTALLATION INSTRUCTIONS

- **Recommended weld throat size :**
⩾5mm; weld leg size being then 7mm.
- **Any low hydrogen rod suitable for use with structural steel may be used.**

ISO2560 type E42 5 B 32 H5, E7018 or equivalent.

WELD DETAIL

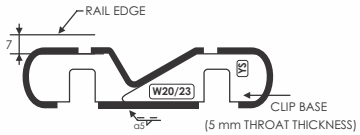

• فاصله بین کلمپ ها بر اساس ماکزیمم نیروهای جانبی حداقل۴۰ سانتی متر و حداکثر ۶۰ سانتی متر توصیه می گردد.
• ارتفاع لبه لاستیکی با توجه به نوع ریل توسط سازنده تعیین می گردد.
• کلیه محصولات شرکت یزد استیل به مدت ۱۸ ماه، از زمان نصب تحت شرایط استاندارد دارای گارانتی می باشند.

• The distance between the clamps is recommended to be at least 40 cm and at most 60 cm based on the maximum lateral forces.
• The height of the rubber edge is determined by the manufacturer according to the type of rail.
• All products of YAZDSTEEL Co. are guaranteed for 18 months from the time of installation under standard conditions.

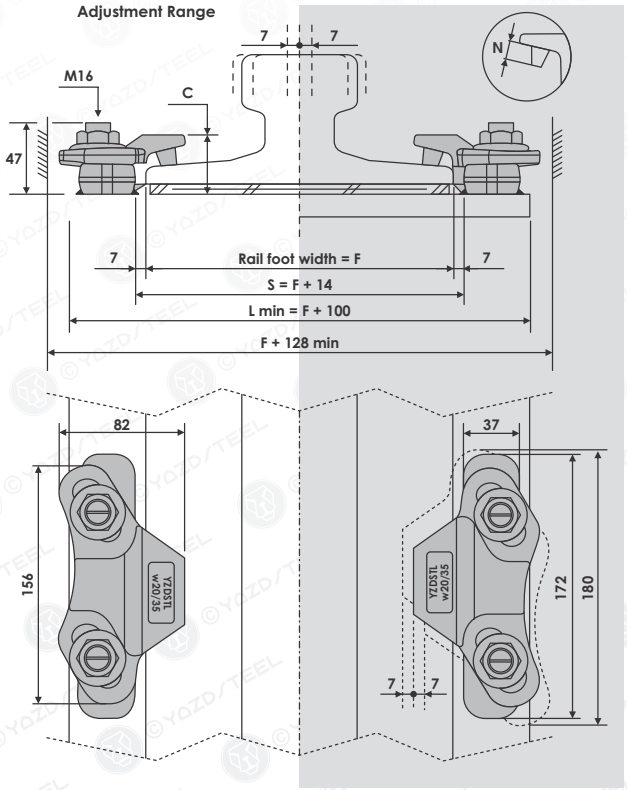

TYPE W20

The **(GANTREX DESIGN)** W20 adjustable crane rail clip is designed to fix heavy rails in the most arduous applications, it can Withstand a horizontal force from the rail of 165 KN (16.5 tonnes).
The clip can be use for rail type: A75 , A100 A120 , A150 , Q80 , Q100 , Q120 , MRS87 etc .

DIMENSION (mm):

CLIPS	C max(mm)	Lateral adjustment (mm)	Bolt Torque (Nm)	Max Resistance to lateral forces* (kN)	Estimated weight (kg)
W20/AN	31	14	200	165	1.375
W20/BN	35	14	200	165	1.395
W20/CN	39	14	200	165	1.410

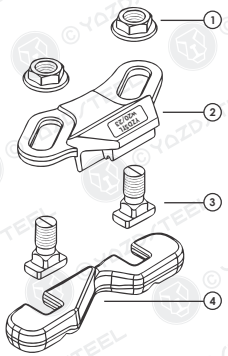

Full designation	
	W20/AN or W20/BN or W20/CN
Components	
1	2x Sp M16 Cl.8
2	1x W20/28N 1x W20/31N 1x W20/35W
3	2x SSB M16x35 8.8 (Thin Nut) or 2x35 M16x39 8.8(Full Nut)
4	1x W20/23

COMPONENTS MATERIALS:

The **RailLok™ W20** is standard with a weldable forged steel lower component a ductile cast iron upper component and vulcanize -bonded rubber nose.
As standard, the bolts and nuts are hot dip galvanized.
The upper component can also be hot dip galvanized on request.

W22 | Weldable Clips - RailLok™
YAZD/TEEL

CLIP SELECTION FOR EACH RAIL

	F (mm)	K (mm)	H (mm)	Weight (kg/m)	Mounting with 7mm RailLok™ Pad	Mounting without 7mm RailLok™ Pad
A100	200.0	100.0	95.0	74.30	W22/CJ	–
A120	220.0	120.0	105.0	100.00	W22/CI	–
A150	220.0	150.0	150.0	150.30	W22/CH	–
CR73	140.0	100.0	135.0	73.30	W22/CI	–
MRS52 (105CR)	131.8	65.1	131.8	52.09	W22/CJ	–
MRS67 (135CR)	131.8	79.4	146.1	66.97	W22/CJ	–
MRS87B (175CR)	152.4	102.4	152.4	86.80	W22/CI	–
QU80	130.0	80.0	130.0	63.69	W22/CJ	–
QU100	150.0	100.0	150.0	88.96	W22/CJ	–
QU120	170.0	120.0	170.0	118.10	W22/CH	–

Note: For more rails please contact Yazd Steel.

CLIP SPECIFICATION :

The **RailLok™** patented clips are specifically designed to facilitate correct mounting of crane rails:
+ The patented design with inclined bolt ensures tight and full self-contact with the rail foot.
+ Bolts with "Square Shank Base" allow the use of impact-wrenches.
+ Easier installation because of the wider adjustment range.
+ Compact design : fits narrow girders and sole plates, avoid interference with guide rollers.

INSTALLATION AND SUGGESTED WELD INSTRUCTIONS

The lower component is welded on the support parallel to the axis of the rail and the upper component is fastened to it by means of the two bolts and nuts. The recommended torque is 200 Nm.
Electrical and pneumatic torque wrenches are allowed as long as the minimum torque of 150 Nm is met and the torque does not exceed 250 Nm. It is recommended the torque is regularly controlled with a calibrated torque wrench. For most applications, the recommended weld throat size is ⊾5mm; the weld leg size is then 7 mm.
If the pad is not used, the weld along the foot of the rail must be adapted. Use any low hydrogen rod suitable for use with structural steel:
For full instructions on weld size and electrodes, refer to the data sheet "Installation and suggested weld instructions

INSTALLATION INSTRUCTIONS

- Recommended weld throat size :
⊾5mm; weld leg size being then 7mm.
- Any low hydrogen rod suitable for use with structural steel may be used.

ISO2560 type E42 5 B 32 H5, E7018 or equivalent.

WELD DETAIL

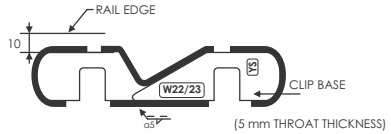

• فاصله بین کلمپ ها بر اساس ماکزیمم نیروهای جانبی حداقل۴۰ سانتی متر و حداکثر ۶۰ سانتی متر توصیه می گردد.
• ارتفاع لبه لاستیکی با توجه به نوع ریل توسط سازنده تعیین می گردد.
• کلیه محصولات شرکت یزد استیل به مدت ۱۸ ماه، از زمان نصب تحت شرایط استاندارد دارای گارانتی می باشند.

• The distance between the clamps is recommended to be at least 40 cm and at most 60 cm based on the maximum lateral forces.
• The height of the rubber edge is determined by the manufacturer according to the type of rail.
• All products of YAZDSTEEL Co. are guaranteed for 18 months from the time of installation under standard conditions.

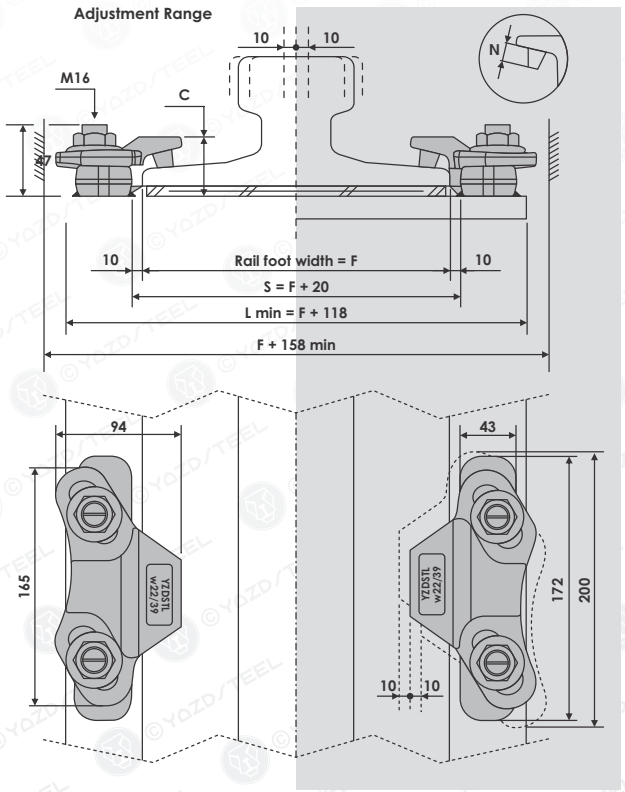

TYPE W22

The **(GANTREX DESIGN)** W22 adjustable crane rail clip is designed to fix heavy rails in the most arduous applications, it can Withstand a horizontal force from the rail of 165 KN (16.5 tonnes).
The clip can be use for rail type: A100 , A120 A150 , Q80 , Q100 , Q120 , MRS87 etc .

DIMENSION (mm):

CLIPS	C max(mm)	Lateral adjustment (mm)	Bolt Torque (Nm)	Max Resistance to lateral forces* (kN)	Estimated weight (kg)
W22/CN	39	20	200	165	1.610

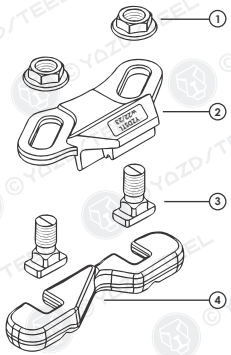

Full designation	
W22/CN	
Components	
①	2x Sp M16 Cl.8
②	1x W22/35N
③	2x SSB M16x35 8.8 (Thin Nut) or 2x35 M16x39 8.8(Full Nut)
④	1x W22/23

COMPONENTS MATERIALS:

The **RailLok™ W22** is standard with a weldable forged steel lower component a ductile cast iron upper component and vulcanize -bonded rubber nose.
As standard, the bolts and nuts are hot dip galvanized.
The upper component can also be hot dip galvanized on request.

Figure 7

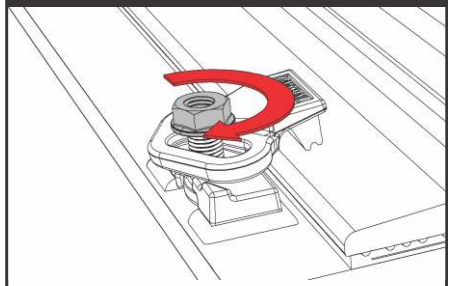

Run nut(s) down bolt(s).

Figure 8

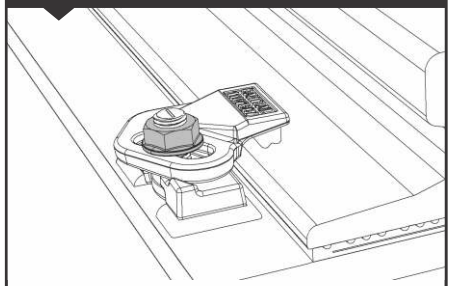

Nut(s) to make contact with clip top.

Figure 9

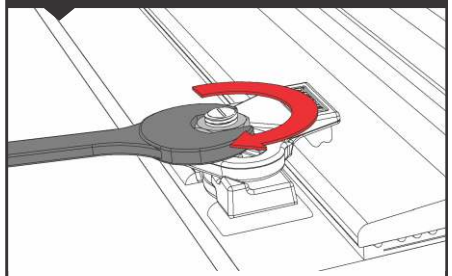

Tighten nut(s) with spanner.

Figure 10

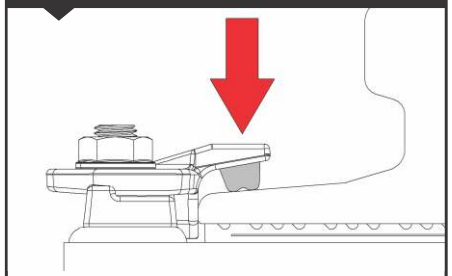

Tighten only until rubber 'nose' is compressed and bottom surface of clip top is in full metal-to-metal contact with clip base.
Do not apply full torque yet.

Figure 11

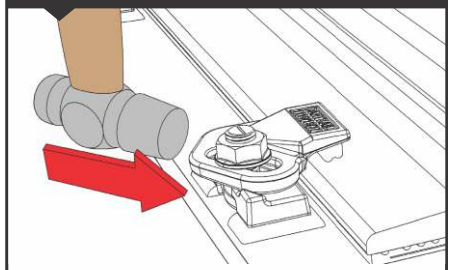

With hammer of about 1 kilo, tap clip body towards rail along direction of slot(s) in clip.

Figure 12

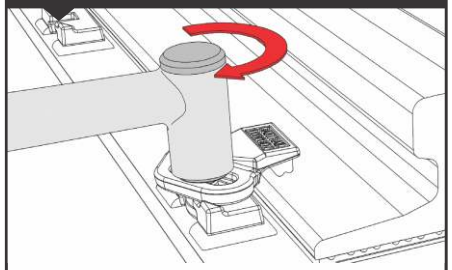

Tighten nut(s) to required torque given on clip datasheet.

Figure 1

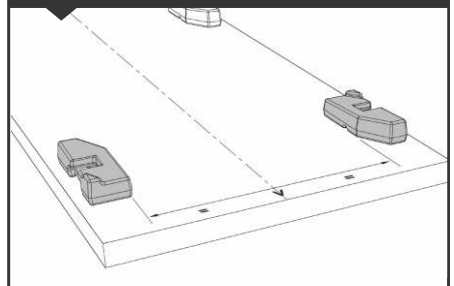

Mark out and position clip base across rail centreline according to 'V' dimension on product datasheet. Position of clip base along rail,to suit project requirements or consult GANTRAIL.

Figure 2

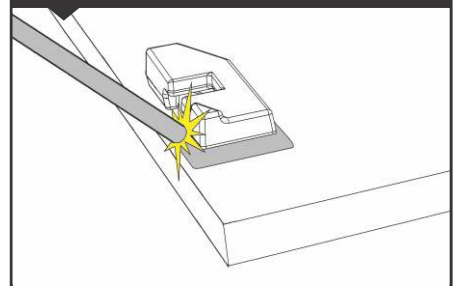

Using suitable electrode, weld clip base(s) to rail support according to 'WELD DETAIL' on product datasheet.

Figure 3

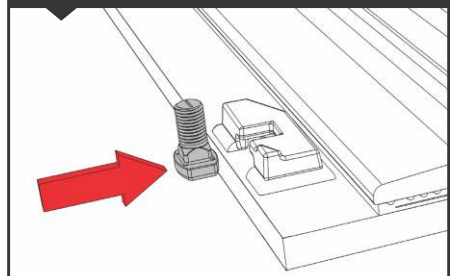

With rail and pad in position, insert special captive bolt into clip base until snug.

Figure 4

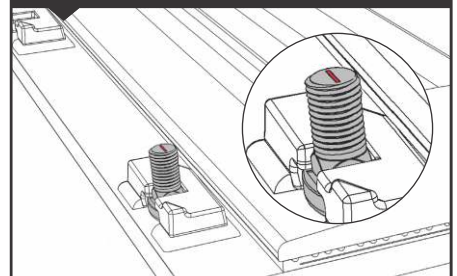

Indicator line in top of bolt will be parallel with rail.

Figure 5

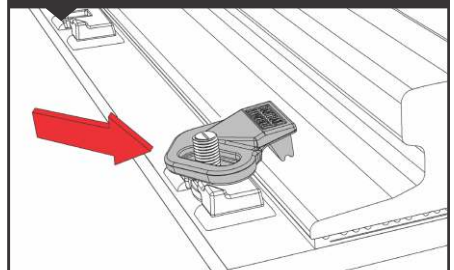

Place clip top over captive bolt(s) with rubber 'nose' resting on upper surface of bottom flange of rail.

Figure 6

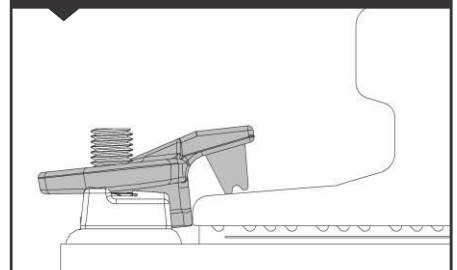

Move clip top into metal-to-metal contact with bottom edge of rail.

(Y216)VX-3116 | Fastening system for Crane Rails YAZD/TEEL

VALEX FASTENING SYSTEMS

RAIL TYPE	A (mm)	B (mm)	C (mm)	Weight (Kg/m)	RAIL WITHOUT PAD	RAIL WITH PAD
A45	45	55	125	22.1	—	VALEX3116-28-9
A55	55	65	150	31.8	—	—
A65	65	75	175	43.1	VALEX3116-28-12	VALEX3116-28-5
A75	75	85	200	56.2	VALEX3116-28-12	VALEX3116-28-5
A100	100	95	200	74.3	VALEX3116-28-12	VALEX3116-28-5
A120	120	105	220	100	VALEX3116-28-9	—
A150	150	150	220	150.3	VALEX3116-28-5	—
MRS87A	101.6	152.4	152.4	86.8	VALEX3116-28-5	—
CR175	102.4	152.4	152.4	86.8	VALEX3116-28-9	—
MRS125	120	180	180	125	—	—
S14	38	80	70	14	—	VALEX3116-28-9
S18	43	93	82	18.3	—	VALEX3116-28-9
S20	44	100	82	19.8	—	VALEX3116-28-9
S24	53	115	90	24.43	—	VALEX3116-28-9
30E1 (S30)	60.3	108	108	30.13	—	VALEX3116-28-9
49E1 (S49)	67	149	125	49.39	VALEX3116-28-12	VALEX3116-28-5
54E1 (UIC54)	70	159	140	54.77	VALEX3116-28-12	VALEX3116-28-5
60E1 (UIC60)	72	172	150	60.21	VALEX3116-28-9	VALEX3116-28-5

TECHNICAL SPECIFICATIONS / ELECTRODE

- Side load 90 (KN)
- Torque tightening 175(Nm)
- Welding seam thickness 10(mm)
- Bolt m16 gr 8.8
- Material: Forged Steel AISI 1030

AWS A5.1-04 E7018-1
EN ISO 2560-A E42 4 842 H5
CE EN 13479

WELD DETAIL

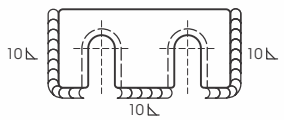

• فاصله بین کلمپ ها بر اساس ماکزیمم نیروهای جانبی حداقل۴۰ سانتی متر و حداکثر ۶۰ سانتی متر توصیه می گردد.
• ارتفاع لبه لاستیکی با توجه به نوع ریل توسط سازنده تعیین می گردد.
• کلیه محصولات شرکت یزد استیل به مدت ۱۸ ماه، از زمان نصب تحت شرایط استاندارد دارای گارانتی می باشند.

• The distance between the clamps is recommended to be at least 40 cm and at most 60 cm based on the maximum lateral forces.
• The height of the rubber edge is determined by the manufacturer according to the type of rail.
• All products of YAZDSTEEL Co. are guaranteed for 18 months from the time of installation under standard conditions.

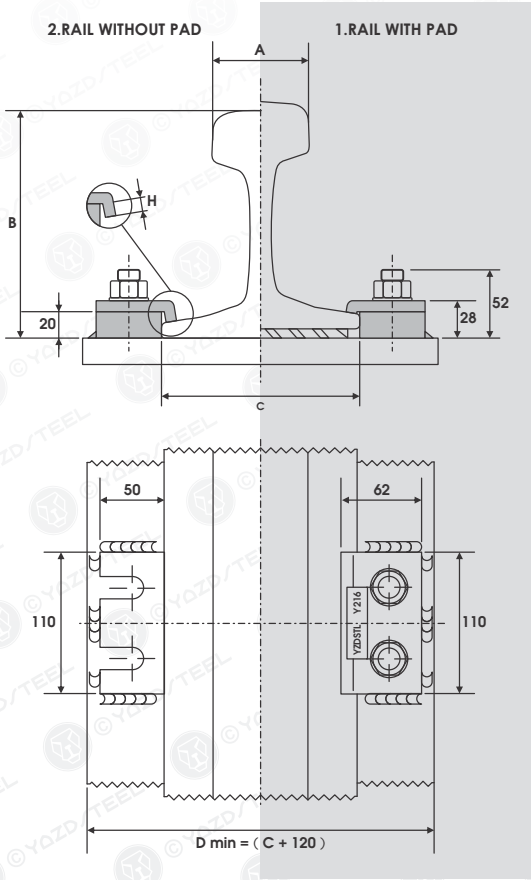

TYPE VX3116

DIMENSIONS (mm)	E	F	G	H	WEIGHT (gr)
VALEX3116-28-5	–	–	–	5	1310
VALEX3116-28-9	–	–	–	9	1340
VALEX3116-28-12	–	–	–	12	1360

FEATURES:
- Fastening system for rails with or without pad.
- System made up of tow interlocked elements which allow easy clip lateral adjustment.
- System components locked together by screws and flanged nuts M16.
- System lower element easily weldable to rail support.

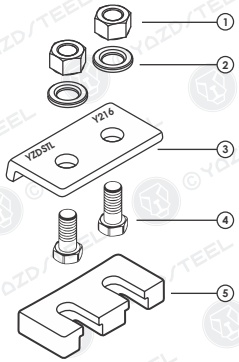

COMPONENTS PROVIDED:
1- Nut M16
2- Hardened Washer
3- Upper clip with steel nose Material Steel quality AISI1030
4- Special screws M16 Gr 8.8
5- Weldable lower clip , Steel quality AISI1030

VX-5016 | Fastening system for Crane Rails YAZD/TEEL

VALEX FASTENING SYSTEMS

RAIL TYPE	A (mm)	B (mm)	C (mm)	Weight (Kg/m)	RAIL WITHOUT PAD	RAIL WITH PAD
A45	45	55	125	22.1	VALEX5016-32-6	VALEX5016-32-13
A55	55	65	150	31.8	VALEX5016-32-6	VALEX5016-32-13
A65	65	75	175	43.1	VALEX5016-32-6	VALEX5016-32-13
A75	75	85	200	56.2	VALEX5016-34-8	VALEX5016-34-15
A100	100	95	200	74.3	VALEX5016-32-13	VALEX5016-34-15
A120	120	105	220	100	VALEX5016-32-13	VALEX5016-34-18
A150	150	150	220	150.3	VALEX5016-32-13	VALEX5016-34-18
MRS87A	101.6	152.4	152.4	86.8	VALEX5016-34-15	—
CR175	102.4	152.4	152.4	86.8	VALEX5016-32-13	VALEX5016-34-18
MRS125	120	180	180	125	—	—
S14	38	80	70	14	—	—
S18	43	93	82	18.3	VALEX5016-32-6	VALEX5016-32-13
S20	44	100	82	19.8	VALEX5016-32-6	VALEX5016-32-13
S24	53	115	90	24.43	VALEX5016-32-6	VALEX5016-32-13
49E1 (S49)	67	149	125	49.39	VALEX5016-34-8	VALEX5016-34-15
54E1 (UIC54)	70	159	140	54.77	VALEX5016-34-8	VALEX5016-34-15
60E1 (UIC60)	72	172	150	60.21	VALEX5016-34-8	VALEX5016-34-15

TECHNICAL SPECIFICATIONS / ELECTRODE

- Lateral adjustment 10(mm)
- Side load 70 (KN)
- Torque tightening 150(Nm)
- Welding seam thickness 10(mm) , 3(mm)
- Special bolt M20 gr 8.8
- Material: Forged Steel AISI 1030

AWS A5.1-04 E7018-1
EN ISO 2560-A E42 4 842 H5
CE EN 13479

WELD DETAIL

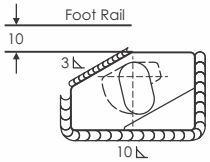

- فاصله بین کلمپ ها بر اساس ماکزیمم نیروهای جانبی حداقل۴۰ سانتی متر و حداکثر ۶۰ سانتی متر توصیه می گردد.
- ارتفاع لبه لاستیکی با توجه به نوع ریل توسط سازنده تعیین می گردد.
- کلیه محصولات شرکت یزد استیل به مدت ۱۸ ماه، از زمان نصب تحت شرایط استاندارد دارای گارانتی می باشند.

- The distance between the clamps is recommended to be at least 40 cm and at most 60 cm based on the maximum lateral forces.
- The height of the rubber edge is determined by the manufacturer according to the type of rail.
- All products of YAZDSTEEL Co. are guaranteed for 18 months from the time of installation under standard conditions.

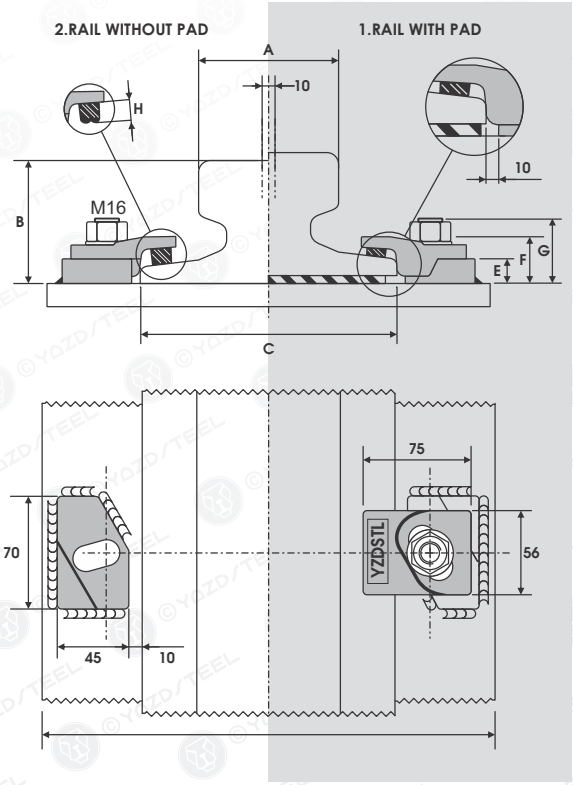

D min = (C + 130)

TYPE VX5016

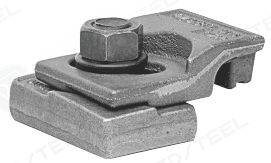

Dimensions (mm)	E	F	G	H	Weight (gr)
VALEX5016-32-6	14	32	45	20	640
VALEX5016-32-13	14	32	45	13	640
VALEX 5016-32-16	14	32	45	10	640
VALEX5016-34-8	16	34	45	20	660
VALEX5016-34-15	16	34	45	13	660
VALEX5016-34-18	16	34	45	10	650

FEATURES:

- Elastic fastening system for rails with or without pad.
- System made up of tow interlocked elements, which allow easy clip lateral adjustment .
- System component blocked together by a special bolt.
- Elastomer nose increases rail-support structure tolerances reduces connections stress allows a better rail fixing.
- System lower element easily weldable to rail support.

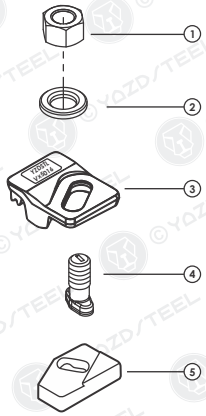

COMPONENTS PROVIDED:

1- Nut M16 Cl.8
2- Hardened Washer
3- Upper part : ductile cast iron ASTM A536
4- Special screws M16 Gr 8.8
5- Weldable lower clip , Steel quality AISI1030

VX-5116 | Fastening system for Crane Rails YAZD/TEEL

VALEX FASTENING SYSTEMS

RAIL TYPE	A (mm)	B (mm)	C (mm)	Weight (Kg/m)	RAIL WITHOUT PAD	RAIL WITH PAD
A45	45	55	125	22.1	VALEX5116-32-6	VALEX5116-32-13
A55	55	65	150	31.8	VALEX5116-32-6	VALEX5116-32-13
A65	65	75	175	43.1	VALEX5116-32-6	VALEX5116-32-13
A75	75	85	200	56.2	VALEX5116-34-8	VALEX5116-34-15
A100	100	95	200	74.3	VALEX5116-32-13	VALEX5116-34-15
A120	120	105	220	100	VALEX5116-32-13	VALEX5116-34-18
A150	150	150	220	150.3	VALEX5116-32-13	VALEX5116-34-18
MRS87A	101.6	152.4	152.4	86.8	VALEX5116-34-15	—
MRS125	120	180	180	125	—	—
S14	38	80	70	14	—	—
S18	43	93	82	18.3	VALEX5116-32-6	VALEX5116-32-13
S20	44	100	82	19.8	VALEX5116-32-6	VALEX5116-32-13
S24	53	115	90	24.43	VALEX5116-32-6	VALEX5116-32-13
30E1 (S30)	60.3	108	108	30.13	VALEX5116-32-6	VALEX5116-32-13
49E1 (S49)	67	149	125	49.39	VALEX5116-34-8	VALEX5116-34-15
54E1 (UIC54)	70	159	140	54.77	VALEX5116-34-8	VALEX5116-34-15
60E1 (UIC60)	72	172	150	60.21	VALEX5116-34-8	VALEX5116-34-15

TECHNICAL SPECIFICATIONS / ELECTRODE

- Lateral adjustment 10(mm)
- Side load 125 (KN)
- Torque tightening 150(Nm)
- Welding seam thickness 10(mm) , 3(mm)
- Special bolt M16 gr 8.8
- Material: Forged Steel AISI 1030

AWS A5.1-04 E7018-1
EN ISO 2560-A E42 4 842 H5
CE EN 13479

WELD DETAIL

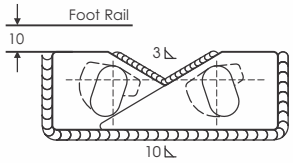

- فاصله بین کلمپ ها بر اساس ماکزیمم نیروهای جانبی حداقل۴۰ سانتی متر و حداکثر ۶۰ سانتی متر توصیه می گردد.
- ارتفاع لبه لاستیکی با توجه به نوع ریل توسط سازنده تعیین می گردد.
- کلیه محصولات شرکت یزد استیل به مدت ۱۸ ماه، از زمان نصب تحت شرایط استاندارد دارای گارانتی می باشند.

- The distance between the clamps is recommended to be at least 40 cm and at most 60 cm based on the maximum lateral forces.
- The height of the rubber edge is determined by the manufacturer according to the type of rail.
- All products of YAZDSTEEL Co. are guaranteed for 18 months from the time of installation under standard conditions.

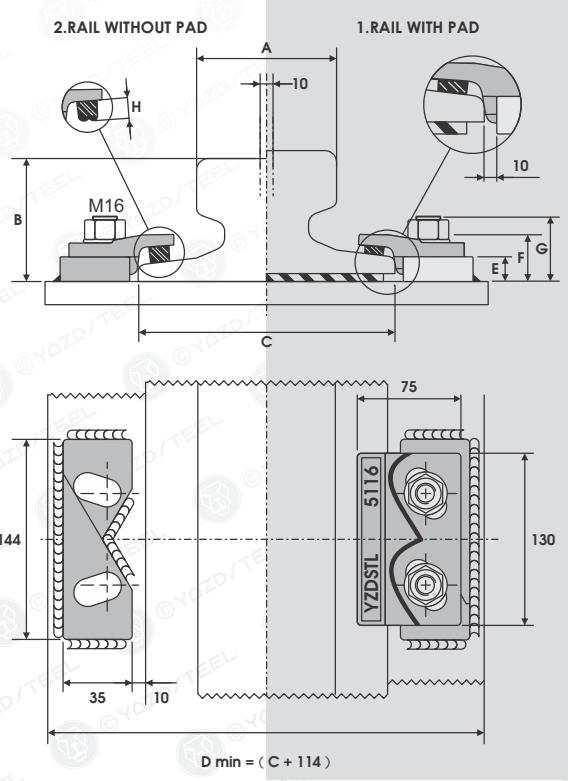

TYPE VX5116

Dimensions (mm)	E	F	G	H	Weight (gr)
VALEX5116-32-6	14	32	45	20	1300
VALEX5116-32-13	14	32	45	13	1280
VALEX 5116-32-16	14	32	45	10	1270
VALEX5116-34-8	16	34	45	20	1380
VALEX5116-34-15	16	34	45	13	1360
VALEX5116-34-18	16	34	45	10	1350

FEATURES:

- Elastic fastening system for rails with or without pad.
- System made up of tow interlocked elements, which allow easy clip lateral adjustment .
- System component blocked together by a special bolt.
- Elastomer nose increases rail-support structure tolerances reduces connections stress allows a better rail fixing.
- System lower element easily weldable to rail support.

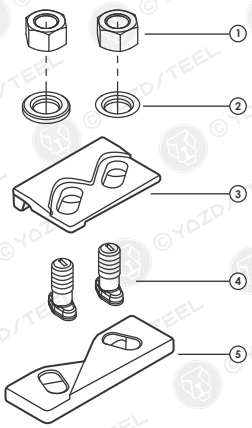

COMPONENTS PROVIDED:

1- Nut M16
2- Hardened Washer
3- Upper clip Material Forged Steel AISI 1030
4- Special screws M16 Gr 8.8
5- Weldable lower clip , Steel quality AISI1030

VX-5120 | Fastening system for Crane Rails YAZD/TEEL

VALEX FASTENING SYSTEMS

RAIL TYPE	A (mm)	B (mm)	C (mm)	Weight (Kg/m)	RAIL WITHOUT PAD	RAIL WITH PAD
A75	75	85	200	56.2	VALEX5120-39-9	VALEX5120-43-13
A100	100	95	200	74.3	VALEX5120-39-9	VALEX5120-43-13
A120	120	105	220	100	VALEX5120-39-9	VALEX5120-39-16
A150	150	150	220	150.3	VALEX5120-43-13	VALEX5120-43-20
CR104	63.5	127	127	51.59	VALEX5120-43-13	VALEX5120-39-19
CR105	65.1	131.8	131.8	52.09	VALEX5120-39-9	VALEX5120-39-16
CR135	76.2	146	131.8	66.97	VALEX5120-39-9	VALEX5120-39-16
CR171	101.6	152.4	152.4	84.83	VALEX5120-43-13	VALEX5120-43-20
MRS87A	101.6	152.4	152.4	86.8	VALEX5120-43-13	VALEX5120-43-20
CR175	102.4	152.4	152.4	86.8	VALEX5120-43-13	VALEX5120-39-19
MRS125	120	180	180	125	VALEX5120-43-20	—
49E1 (S49)	67	149	125	49.39	VALEX5120-39-9	VALEX5120-43-13
54E1 (UIC54)	70	159	140	54.77	VALEX5120-39-9	VALEX5120-43-13
60E1 (UIC60)	72	172	150	60.21	VALEX5120-39-9	VALEX5120-43-16

TECHNICAL SPECIFICATIONS / ELECTRODE

- Lateral adjustment 14(mm)
- Side load 250 (KN)
- Torque tightening 275(Nm)
- Welding seam thickness 10(mm) , 3(mm)
- Special bolt M20 gr 8.8
- Material: Forged Steel AISI 1030

AWS A5.1-04 E7018-1
EN ISO 2560-A E42 4 842 H5
CE EN 13479

WELD DETAIL

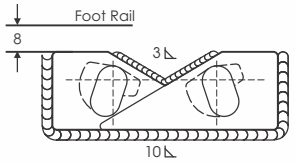

- فاصله بین کلمپ ها بر اساس ماکزیمم نیروهای جانبی حداقل۴۰ سانتی متر و حداکثر ۶۰ سانتی متر توصیه می گردد.
- ارتفاع لبه لاستیکی با توجه به نوع ریل توسط سازنده تعیین می گردد.
- کلیه محصولات شرکت یزد استیل به مدت ۱۸ ماه، از زمان نصب تحت شرایط استاندارد دارای گارانتی می باشند.

- The distance between the clamps is recommended to be at least 40 cm and at most 60 cm based on the maximum lateral forces.
- The height of the rubber edge is determined by the manufacturer according to the type of rail.
- All products of YAZDSTEEL Co. are guaranteed for 18 months from the time of installation under standard conditions.

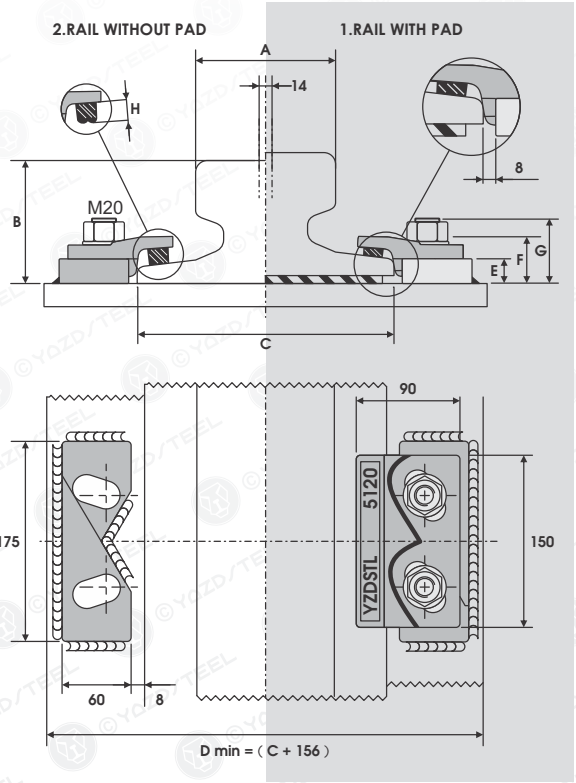

TYPE VX5120

Dimensions (mm)	E	F	G	H	Weight (gr)
VALEX5120-39-9	20	39	54	19	2780
VALEX5120-39-16	20	39	54	12	2750
VALEX 5120-39-19	20	39	54	9	2740
VALEX5120-43-13	24	43	58	19	2960
VALEX5120-43-20	24	43	58	12	2930
VALEX5120-43-23	24	43	58	9	2920

FEATURES:

- Elastic fastening system for rails with or without pad.
- System made up of tow interlocked elements, which allow easy clip lateral adjustment .
- System component blocked together by a special bolt.
- Elastomer nose increases rail-support structure tolerances reduces connections stress allows a better rail fixing.
- System lower element easily weldable to rail support.

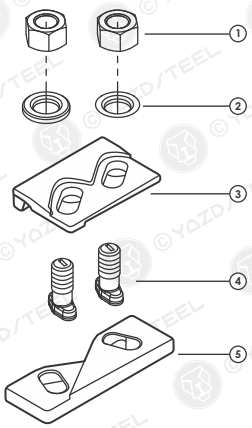

COMPONENTS PROVIDED:

1- Nut M20 Cl.8
2- Hardened Washer
3- Upper clip Material : Ductile cast Iron ASTM A536
4- Special screws M 20 Gr 8.8
5- Weldable lower clip , Steel quality AISI1030

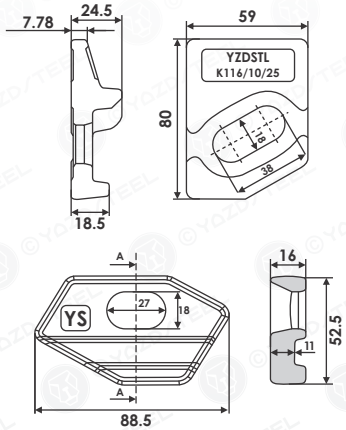

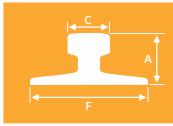

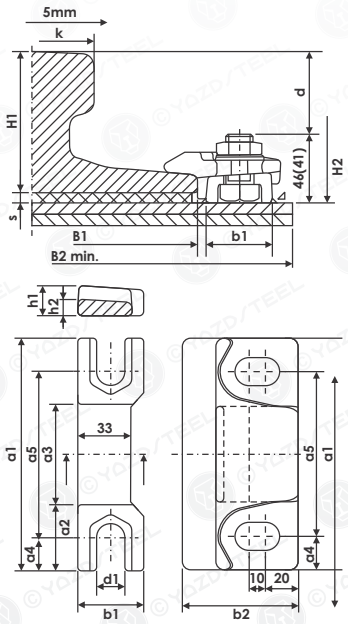

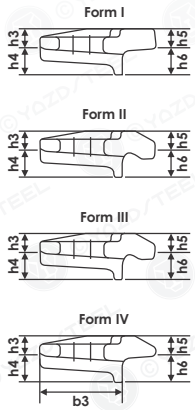

TYPE K116

Material
Full Forged steel AISI 1030

Weight (kg)	Side Load Max (KN)	Tightening Torque (N/M)
0.8	90	175

	F (mm)	C (mm)	A (mm)	Clip reference for rail with pad	Clip reference for rail without pad
A45	125	45	55	K116/10/32/10	K116/10/25/10
A55	150	55	65	K116/10/32/10	K116/10/25/10
A65	175	65	75	K116/10/32/10	K116/10/25/10
R33	114	60	128	K116/10/32/10	K116/10/25/10
R38	114	68	134	K116/10/32/10	K116/10/25/10
P43	114	70	140	K116/10/32/10	K116/10/25/10
P50	132	70	152	K116/10/32/10	K116/10/25/10
S30	108	60	108	K116/10/32/10	K116/10/25/10
S49 (49E1)	125	70	149	K116/10/32/10	K116/10/25/10
U33 (46E2)	134	64	145	K116/10/32/10	K116/10/25/10
UIC50 (50E1)	125	72	152	K116/10/32/10	K116/10/25/10
UIC60 (60E1)	150	74	172	K116/10/32/10	K116/10/25/10

TYPE RIW-15756

TRANSFERCAR CLAMP

For with or without pad suitable for rail A100,A120,MRS7and other size.

For more rail please contact YAZDSTEEL

Size	dimensions (mm)																			
	Die no.	Bottom Plate								From	Die no.	Top Plate								
h1		a1	a2	a3	a4	a5	b1	d1	h2			a6	a7	b2	b3	h3	h4	h5	h6	kg$^{2)}$
18	1574	140	40	60	20	100	40	17	10	I	1573	41	58	70	50	13	15	9	19	1.59
										II	1575					11	17	17.5	10.5	1.66
										III	1571							15	13	1.64
										IV	1572							12	10	1.61
21	1570								13	I	1573					13	15	9	19	1.68
										II	1575					11	17	17.5	10.5	1.75
										III	1571							15	13	1.73
										IV	1572							12	10	1.70

WJK M20 (38) & (43)
Weldable clamp
Upper Part Ductile cast Iron
Max Side Load: 130 Kn
T.Torque (Nm): 250 N/M

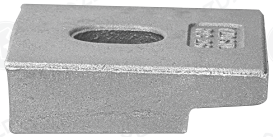

QU-L & QU-SH
Ductile cast Iron
Ax : 20 mm
Dim :75x50x24 mm - 70x50x24 mm

RC 26
Ductile cast Iron
Ax : 25 mm
Dim : 85X80X24 mm

F22 & M22
Forged steel
Ax : 35 mm
Dim : 100X60X14 mm

RC 15 & RC 24
Ductile cast Iron
Ax : 10 & 20 mm
Dim : 50X45X17 mm - 65X60X20 mm

TF 216 & M16
Transfer Car
Upper Part Ductile cast Iron
Weldable Clamp

HULK & M16
Special Washer
Boltable clamp
Ductile cast Iron

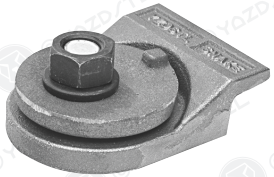

SNAKE M16
Special Washer
Boltable clamp
Ductile cast Iron

RIW212 & M12
Weldable Clamp
Upper Part Ductile cast Iron

RIW5393 & M12
Lower&Upper forged Steel
Weldable Clamp

03

Rail Pads
MK2 / MK6

پدهای ریل

Tel: +98 21 66 69 5000
Fax: +98 21 66 62 9067
www.yazdsteel.com
info@yazdsteel.com

The MK2 pads are manufactured from wear resistant durable thermoplastic that has Elastomeric properties. They are unaffected by oil, grease or ultraviolet light. They have been tested to many times the design loads and show complete recovery.
Tapered leading and trailing edges along the rail reduce edge loading on the sole plate and grout when the crane wheel is between sole plates.

MATERIAL	EVA COPOLYMER
Temperature range	-25°c to +75°c
Recommended maximum compressive stress (compressive stress is installation related and should be reduced above 50°c)	15 N/mm²
Tensile strength (ISO R527)	16 Mpa
Elastic modulus (ISO R527)	100 Mpa
Elongation at break (ISO R527)	750%
Shore hardness (ISO 868 A scale)	95

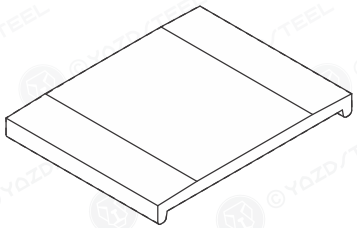

RAILS FOR DISCONTINUOUS APPLICATIONS:

Probably the most widely used crane rails in the world are the A sections to DIN 536:1981. These have a wide flange originally for riveting to girders but they are weak in vertical bending.
They are not the best choice for discontinuous applications.
Excellent rails for light applications are railway rails. For heavier wheel loads taller rails are preferred e.g. QU70, ISCR100 and MRS87A.

	For vertical wheel loads up to 60kN	For vertical wheel loads up to 200kN	For vertical wheel loads up to 350kN
	Clips mounted on anchor bolts	Clips mounted separate to 2 anchor bolts	Clips mounted separate to 4 anchor bolts
	3116/10 clips	3120/15 clips	3124/15 clips
Plan View	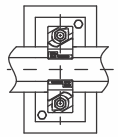	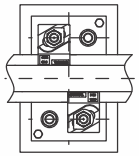	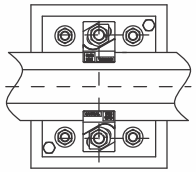
Front View	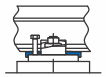	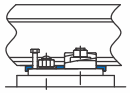	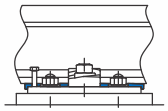

THESE ARE ONLY TYPICAL EXAMPLES.

INSTALLATION INSTRUCTIONS:

The installation method should ensure that the sole plates are level with the base of the rail.
This is best achieved by leveling the rail and then bringing the sole plate plus pad, up to meet the bottom surface of the rail over its full area.

The MK2 crane rail Pads are designed for installations where rails are mounted on individual sole plates. Front and back lips sit over the sole plate to prevent pad displacement. The pad is cut to 5mm less than the width of the rail bottom flange.
The pads are made in several sizes so that the total area is chosen to suit the expected wheel load.

PART NO.	L (mm)	W (mm)
MK2-110	110	Rail foot width less 5mm
MK2-120	120	
MK2-165	165	
MK2-220	220	
MK2-250	250	
MK2-320	320	

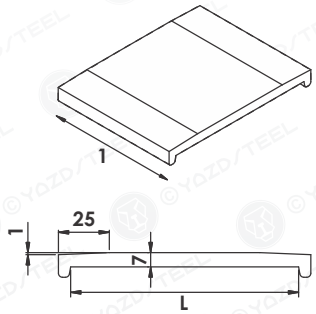

SPECIFICATIONS:

Sole plate width must match pad "L" dimension from table below

FEATURES:

The Mark 2 pad incorporates a number of proven features. When used in conjunction with adjustable rail clips , Mark 2 crane rail pad will significantly reduce stresses in the rail grout and concrete below the sole plate.
It allows the rail to rotate small amounts so that it conforms to the crane wheel.
This gives an even distribution or wheel loads onto the supporting structure.

The Mark 2 pad:

Eliminates load concentrations and resultant fatigue stresses in the rail mounting.
Protects the crane mechanism and increases rail, wheel, bearing and axle life.
Reduces the wear Of rail and support surface by eliminating fretting corrosion.

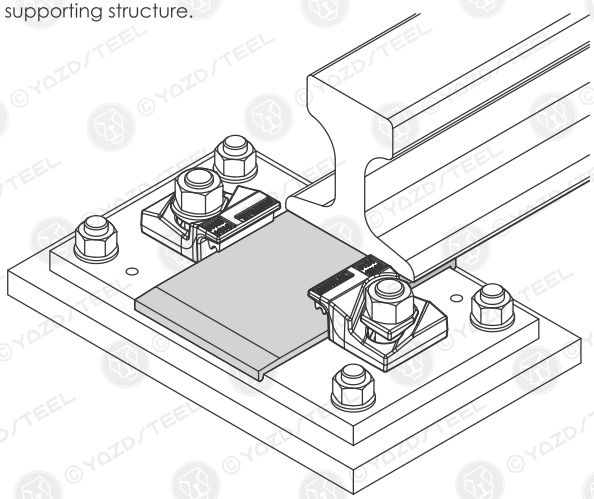

GENERAL CHARACTERISTICS:

The MK6 pad has been specially designed for the soft mounting of crane rails.
The main functions of the pad are to:

- Distribute the wheel load over a larger surface area - See Fig. 5
- Eliminate load concentrations and the resulting fatigue stresses - See Fig. 4
- Compensate for the uneven surface between the rail and its support
- Reduce impact, vibration and noise
- Eliminate fretting corrosion (wear) of the support surface under the rail.

The Mark 6 pad fulfills these requirements in the following manner:

1- It is manufactured from a synthetic elastomer especially resistant to wear, shear and crushing as well as oil, grease, ozone, and ultra violet rays.

2- Its upper face is grooved in order to obtain a variable stiffness see load-denection curve fig, 1. This increases the pad's resistance to wear without introducing excessive bending stresses in The rail, exp as explained below:

- The reduction of pad thickness under the wheel load does not result in pad elongation (bulging) In the direction transverse to the rail as would be the case with a plain pad. Here the thickness reduction results in the "filling" of the grooves, thus, there is practically no relative movement between rail and pad, again minimizing wear.

- As the grooves fill, the vertical stiffness of the pad increases and the bending stresses in the rail due to the wheel load increase more slowly.

3- It is reinforced with a high strength galvanized steel strip that is at least 90% of the width of the pad and fully vulcanized to the rubber. The reinforcement acts as a diaphragm and gives the pad lateral stiffness preventing it from deflecting under the side thrust of the rail, regardless of wheel load and loss of friction from oil or grease.

4- Edge seals on both the top and bottom surfaces prevent the ingress of dirt and water which can cause Premature failure of the pad, rail and support structure.

5- It is manufactured by an extrusion process which eliminates problems commonly experienced with a batch molding process such as variations in durometer , risk of contamination, pad straightness and Centering of the reinforcing steel.
It also allows the pad to be extruded in longer lengths.

YAZD/TEEL Resilient Rail Pad MK6 | For discontinuous Rail support

TYPICAL LOAD DEFLECTION CURVE FOR MK 6 PAD

FIG. 1

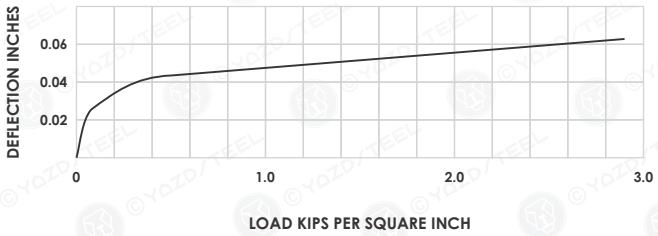

TYPICAL PRESSURE DISTRIBUTION UNDER RAIL

FIG. 2

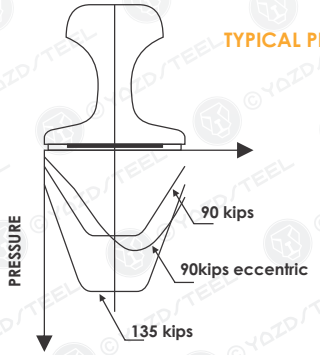

Typical pressure distribution in the transverse direction for a rail on MK6-RFS pad.

The shape of this curve will be similar for nearly all rail sections.

The eccentric loading curve shows the ability of the pad to center the load.

TYPICAL STRESSES IN GIRDER WEB

FIG. 3

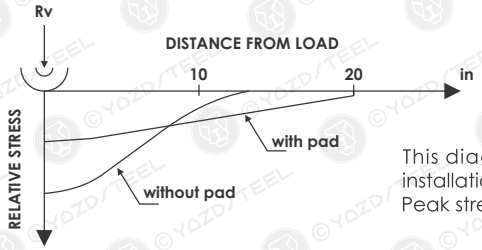

This diagram shows the relative stresses for installations with and without pad.
Peak stresses are typically reduced by50%.

INSTALLATION RECOMMENDATIONS:

The reinforced pad is recommended for all installations, both indoors and out. For each installation, and will recommend the type of pad which best meets the service conditions. For best results, and clips should also be used to prevent lateral movement of the rail.

The upper surface of the supporting structure should be dean and free from oil, grease and any sharp or abrasive particles that are likely to damage the pad. The pad should be laid in continuous lengths on the support surface, with the grooved side up, the ends butted tightly together and centered at a pair of rail clips. It should be cut as needed to ensure that a joint does not coincide with a gap between adjacent girders.

Where possible, the joint should be not less than 3 ft from the end of the girder.
The minimum length of pad should be not less than ten feet. It should be centered beneath the rail flange so that it is completely covered.

MATERIAL CHARACTERISTICS:

Shore A hardness ..... 75° ±5
Tensile strength, after aging ..... minimum 1525 psi
Elongation, after aging .....minimum 200%
Permanent set 5%
Rebound resilience..... 30%

VIBRATION AND NOISE REDUCTION:

A noise reduction Of 10% and vibration reduction Of up to 48% can be expected

SERVICE TEMPERATURE:

-150 °F to +210 °F

Thickness (mm)	Length (mm)	Width (mm)	Suitable For Rails
7	12000	120	A45-QU70-QU80-S49-UIC50-UIC54-P50-U33
7	12000	150	A55-QU100-UIC60
7	12000	170	A65-QU120
7	12000	195	A75-A100
7	12000	215	A120-A150

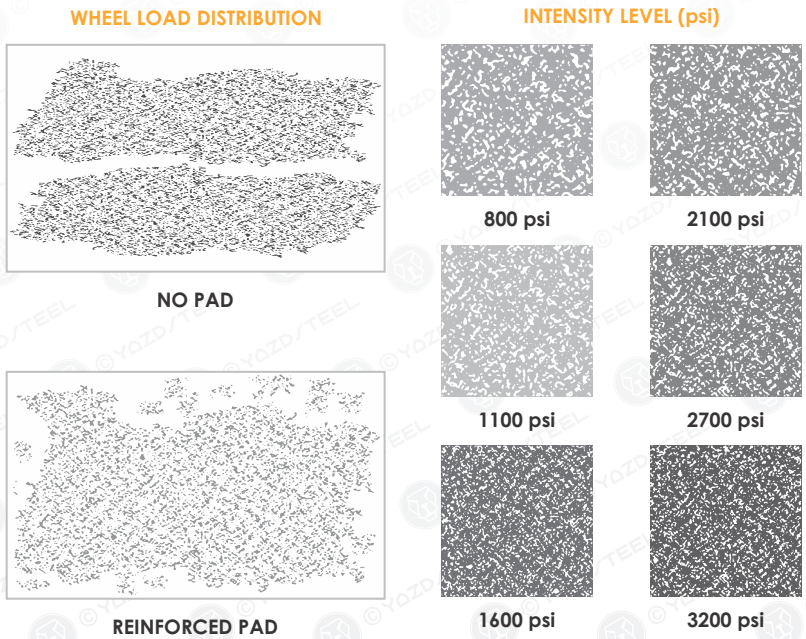

FIGURE 1

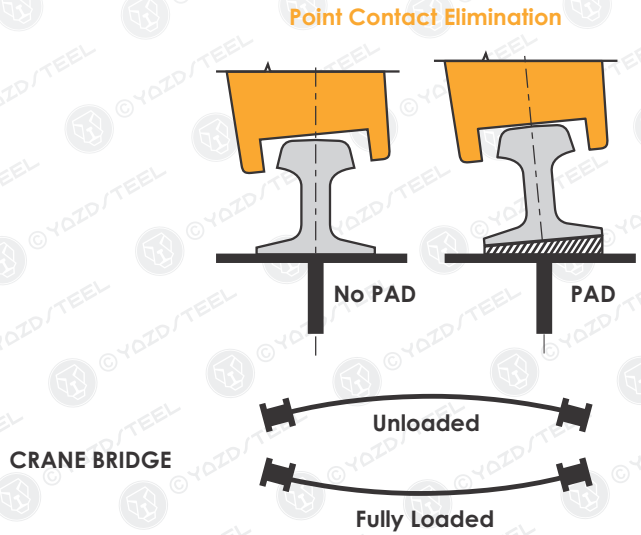

04

Rail Standards

استاندارد ریل ها

Tel: +98 21 66 69 5000
Fax: +98 21 66 62 9067
www.yazdsteel.com
info@yazdsteel.com

Table1:
Dimensions, limit deviations and geometrical tolerances (cf. subclause 2.2.1)

Carne rail symbol	k	k limited deviations	b1	b1 limited deviations	b2	b3	f1	f2	f3	h1	h1 limited deviations	h2	h3	r1	t2 3)	r3	r4	r5	r6	t1 1)	t2 2)
A45	45	±0.6	125	$^{+1.5}_{-3}$	54	24	14.5	11	8	55	±1	24	20	4	400	3	4	5	4	2	+0.8
A55	55	±0.6	150	$^{+1.5}_{-3}$	66	31	17.5	12.5	9	65	±1	28.5	25	5	400	5	5	6	5	2	+0.6
A65	65	±0.8	175	$^{+1.5}_{-4}$	78	38	20	14	10	75	±1	34	30	6	400	5	5	6	5	2	+0.6
A75	75	±0.8	200	$^{+2}_{-5}$	90	45	22	15.4	11	85	±1	39.5	35	8	500	6	6	8	6	2	+0.8
A100	100	±1	200	$^{+2}_{-5}$	100	60	23	16.5	12	95	±1.5	45.5	40	10	500	6	6	8	6	3	+0.8
A120	120	±1	220	$^{+2}_{-5}$	120	72	30	20	14	105	±1.5	55.5	47.5	10	600	6	10	10	6	3	+1.0
A150	150	±1	220	$^{+2}_{-5}$	—	80	31.5	—	14	150	±1.5	64.5	50	10	800	10	30	30	6	3	+1.0

1) Cf. subclauses 2.2.2 and 2.2.4 2) Cf. subclauses 2.2.3 and 2.2.4 3) Cf. Explanatory notes

2-2-2 The tolerance on the symmetry of the head, ti, shall be established for two parallel surfaces at a distance of t1 from each other, the reference plane being that at the center of the head, which is equal to bl/2.

2-2-3 The rail seat shall not be convex, the baseplate being subject to the tolerance on flatness t2, specified in table 1 (cf. figure 2).

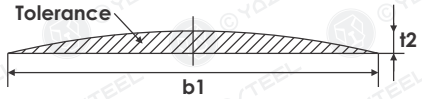

figure 2: Tolerance on flatness of baseplate

2-2-4 The specifications given in ISO 1101 shall apply for tolerances tl and t2.

3- Mass and section parameters:

3-1 Figure 3 illustrates the relevant stress components of crane rails, in accordance with DIN 1080 Parts I and 2.

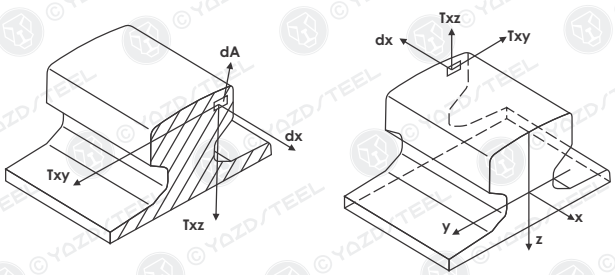

In keeping with current practice in standards published by the International Organization for Standardization (ISO), a comma has been used throughout as the decimal marker.

1-Scope and field of application:

This standard specifies requirements for hot rolled crane rails with a flat bottom (type A), with the dimensions specified in table 1 and made from steel with the properties specified in clause 4.

2- Dimensions and designation:

2-1 Designation

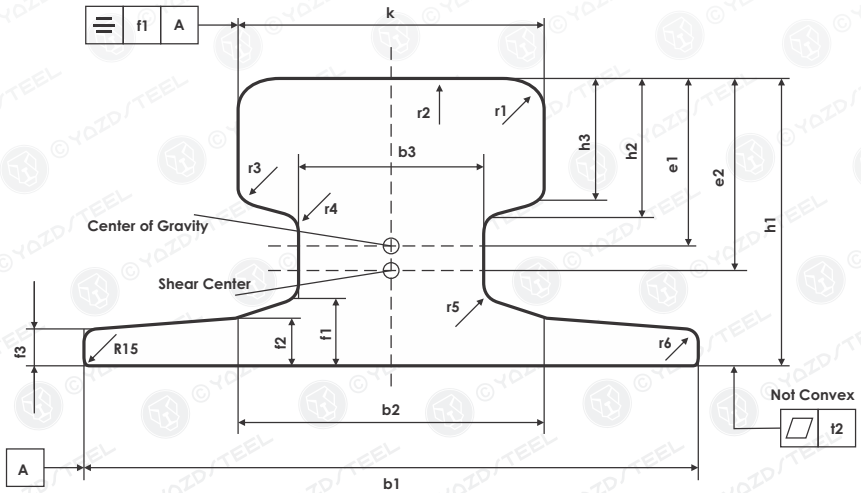

Figure 1: Type A crane rail

Designation of a flat bottom crane rail (type A) complying With this standard, With a head Width, k, of 100 mm (A 100) and made from steel with a minimum tensile strength of 690 N/mm^2:

Crane rail DIN 536 - A100 - 690

2-2 Dimensions and tolerances:

2-2-1Crane rails shall be of the sizes and be subject to the limit deviations and geometrical tolerances specified in table

1. Any values for which no tolerance is specified shall be regarded as approximate values.

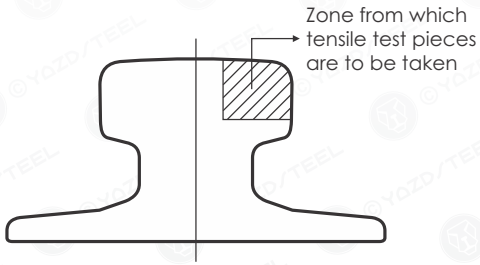

Figure 4: Orientation of sampling for tensile testing

5- Form of supply:

5-1 Crane rails shall be supplied in specified lengths, which shall be the subject of agreement.
5-2 The upper limit deviation for the crane rail length shall be 100 mm, lower values being the subject of agreement. The lower limit deviation is zero.

6- Other requirements:

6-1 Crane rails shall be free from internal and external defects that would likely impair their performance to a considerable degree.
6-2 Welded crane rails shall comply with the requirements specified in (Iron and steel instruction sheet) (SEB) 368 100.
6-3 The tolerances on crane traveling and crane trolley tracks and on welded rail joints shall be as specified in SEB 664 035.

Standards and other documents referred to:

DIN 1080 Part 1: Quantities, symbols and units used in civil engineering; principles.
DIN 1080 Part 2: Quantities, symbols and units used in civil engineering; statics.
DIN 50 049: Inspection documents for the delivery of metallic products.
ISO 1101: 1983Technical drawings; geometrical tolerancing ; tolerancing of form orientation. location and run-out; generalities, definitions, symbols and indications.
on drawings

Other relevant standard and document:

DIN 15 070 Cranes; design principles for track wheels.
[1] Analysis of the bearing capacity of crane rails installed on elastic bedding.

Previous editions:

DIN 536:05.41; DIN 536 Part 1: 0459, 12.74.

Amendments:

In comparison with the December 1974 edition, the following amendments have been made.
A: Rail type A 150 is included for the first time.
B: Additional dimensional and geometrical tolerances have been specified.
C: More information has been given with regard to section parameters.
D: The standard has been editorially revised

3-2 The mass of crane rails, as a function of the section parameters, shall be as specified in table 2.

Table 2: Mass and section parameters

Carne rail symbol	Mass in kg/m	e_1 cm	e_2 cm	A_x cm²	Section Parameters 1) A_y cm²	A_z cm²	I_x cm⁴	I_y cm⁴	I_z cm⁴	S_y cm³	S_z cm³
A45	22.1	3.33	4.24	28.2	17.0	9.6	39	90	170	22.88	26.12
A55	31.8	3.90	4.91	40.5	24.8	14.6	88	178	337	38.45	48.64
A65	43.1	4.47	5.61	54.9	33.7	20.2	173	319	606	60.18	69.22
A75	56.2	5.04	6.29	71.6	44.1	26.9	311	531	1011	88.41	102.09
A100	74.3	5.29	6.27	94.7	65.8	41.6	666	856	1345	128.78	141.58
A120	100.0	5.79	6.53	127.4	97.1	58.5	1302	1361	2350	187.23	222.35
A150	150.3	7.73	8.48	191.4	153.6	107.1	2928	4373	3605	412.00	342.60

1) In accordance with DIN 1080 Parts 1 and 2, the symbols have the following meaning.

A_x Cross-sectional area
A_y , A_z Surfaces subjected to shear
I_x Second moment of area (torsion)
I_y , I_z Second moments Of area (flexure)
S_y, S_z Static moments of parts of cross sections delineated by and related to the principal axes

4- Materials:

4-1 Hot rolled Crane rails shall be made from steel complying with the specifications given in table 3. In the case Of rail types A 75, A 100, A 120 and A 150, the required minimum tensile strength (690 or 880 N/mm²) shall be specified at the time Of ordering.

4-2 The actual tensile strength of the material may be 20 N/mm2 less than the minimum values specified, unless otherwise agreed at the time of ordering.

4-3 Tensile strength shall be determined on longitudinal test pieces which have been taken from the zone of the crane rail illustrated in figure 4.

4-4 Crane rails may be supplied with a DIN 50049 inspection document, the type of document being the subject of agreement at the time of ordering. 4.5 In the strength analysis, a guideline value of 60% of the value specified for tensile strength in table 3maybe assumed tor the proof strength Table

3: Tensile strength and chemical composition of steel

Carne rail symbol 1)	Minimum tensile strength2) N/mm²	Chemical composition (percentage by mass) 3) C	Si max	Mn	P max	S max
A45 , A55 A65 , A75 A100 , A120 A150	690	0.40 to 0.60	0.35	0.80 to 1.20	0.045	0.045
A75 , A100	880 4)	0.60 to 0.80	0.50	0.80 to 1.30		
A120 , A150		0.55 to 0.75	0.50	1.30 to 1.70		

1) Cf. subclause 4.1 2) Cf. subclauses 4.2 and 4.3 3) Guideline values for cast analysis.
4) The method used to determine chemical composition shall be up to the manufacturer.

Explanatory notes:

It was originally intended to prepare a new series of standards on crane rails but after many justified objections were raised at the draft stage, the project was terminate and the decision was made to update the specifications of the present standard.
To ensure interchangeability with crane rails complying with the previous edition, no changes were made to the principal dimensions.

Over time, crane systems have been modified, and new designs developed, which involve an increase in the load the wheel exerts on the rail and an improvement in the properties of the wheel material. In practice, this has meant that type A120 rails suffered frequent fractures particularly in the welded joints. Laboratory tests and analyses have shown that at the load l levels currently involved, the strength of the welded joint zone falls below the fatigue strength at a stated number of cycles, i. e. the possibility of fracture cannot be ruled out.

To ensure the future performance of crane rails at these higher load levels, type A150 rails have been specified here. The connecting dimensions for their base plates correspond to those for type A120 rails. so that no changes need to be made to the rail fixings when this type is incorporated into existing rail-wheel systems. However, changes will have to be made to the crane design, since the head of type A150 rails is 45 mm higher than type A120, which will have a negative impact on other features (e.g. required power supply).

The shape of the head was previously required to be flat, but is now to be slightly curved. Laboratory tests and practical experience have shown that this causes the load to be applied more centrally and prevents an accumulation of stresses at the rail edges.

The dimensional and geometrical tolerances and section parameters have been specified in greater detail and brought into line with the design principles given in DIN 1080 Parts 1 and 2 which reflect the state of the art. Other standards relating to crane rails are currently in preparation, these covering elastic bedding of crane rails, crane rail fixings, and sole plates

International Patent Classification:

B 66 C 7/00
E 01 B 25/00

Tel: +98 21 66 69 5000
Fax: +98 21 66 62 9067
www.yazdsteel.com
info@yazdsteel.com

ICS 93.100

Descriptors:
Rails, flat bottom rails. dimensions, static properties, steel.
In keeping with current practice in standards published by the International Organization for Standardization (ISO), a comma has been used throughout as the decimal marker.
(Dimensions in mm)

Foreword:
This standard has been prepared by Technical Committee(Steel and iron Standards Committee). It is based on requirements laid down in ISO 5003

Amendments:
The following amendments have been made to DIN 5901-1 , March 1963 edition, and DIN 5902 July 1968 edition.
a) Both standards have been combined to form a single standard.
b) Detailed specifications regarding the materials, static properties and the testing of rails have been included.

Previous editions:
DIN 5901: 1938-01, 1948-03, 1965-03; DIN 5902-1: 1942-12, 1948-03, 1965-06, 1968-07.

1-Scope and field of application:
This standard covers the materials. design. dimensions and tolerances for grooveless flat bottom rails with a mass per unit length less than 54 kg/m.
For steel grades, see subclause 6, and for dimensions, see tables 1 to 3.

NOTE: At present a European Standard on symmetrical flat bottom steel rails with a mass per unit length of at least 46 kg/rn is being drawn up by CEN/TC256 As it is due to cover specifications for rail section no. S49, this particular rail section will not be included in future editions of DIN 5901.

2-Normative references:
This standard incorporates, by dated or undated reference, provisions from other publication. These normative references are cited at the appropriate places in the text and the titles of the publications are listed below. For dated references, subsequent amendments to or revisions of any of these publications apply to this standard only when incorporated into it by amendment or revision. For undated references, the latest edition of the publication referred to applies.

EN T0002-1:
Metallic materials; tensile testing - Method of test at ambient temperature.
(including Amendment AC 1 : 1990)

DIN EN 10021:
General technical delivery conditions for steel and iron products.

DIN EN 10204:
Inspection documents for metallic products.

ISO 2768-1 : 1989 General tolerances - Part 1: Tolerances for linear and angular dimensions without individual tolerance indications.

ISO 5003 : 1980 Flat bottom railway rails and special rail sections for switches and crossings for non- treated steel - Technical delivery requirements Selection and preparation of samples and test pieces for steel and iron and steel products (Aluminothermic welding of rails).

3 Main features and dimensions:

3-1 Rail sections:
3-1-1 Dimensions and tolerances for rail sections as illustrated in figure 1 shall comply with the specifications of tables and 2.

3-1-2 The tolerances on asymmetry specified in table 2 are based on the gauging method described in appendix A.

3-1-3 The tolerances on the height and slope Of the fishing surface specified in table 2 are based on the gauging method described in appendix B.

3-1-4 The tolerances on end squareness specified in table 2 apply throughout the length of rail sections, with measurements taken in both the vertical and horizontal directions.

3.2 Length of rail sections:
3-2-1 The nominal length of rail sections shall be agreed upon at the time of ordering. preference being given to a length range of 8 to 11 m for rail sections no. S 10 to S 30, or a length range of 15 to 30 m for rail sections no. S 33 to S 49.

3-2-2 The limit deviations for length shall be ± 10 mm for rail sections no. S 10 to S 30and ±4 mm for rail sections no. S 33 to S 49.

3.3 Fishbolt holes:
3-1-1 At the customer's request, fishbolt holes may be drilled or punched into rail sections. Whether fishbolt holes are drilled or punched on both sides of the rail brand mark or on the right (LR) or left side (LL) of the brand mark shall be the subject of agreement.

3-3-2 The nominal diameters and limit deviations for fishbolt holes (cf. figure 2) shall be as specified in table 3.

3-4 Unspecified tolerances In cases where tolerances have not been specifiedrefer to ISO 2768-1.

4 Designation:
The standard designation for rail sections in compliance with this standard shall include the following details in the order given below:
+ name of item (rail)
+DIN number (DIN 5901)

+ Designation (i.e. number) Of rail section (see table 1);
+ Hole pattern desired (where relevant);
+ Steel designation (Steer grade or material number; see table 5).

The designation for a rail section no. S 41 R 10 made of grade R0900 steel (material number 1.0623). with fish bolt holes on the right side of rolling mark (LR), shall read:

Rail DIN 5901 - S 41 LR R0900 or Rail DIN 5901 - S 41 RIO - 1.0623

5- Mass per unit length and static properties:

The mass per unit length and static properties of rail sections listed in table 4 have been calculated on the basis of nominal dimensions given in table 1

6- Materials and manufacture:

6-1 The desired steel grade, selected from table 5, shall be stated in the order.

6-2 Rails as specified in this standard are suitable for welding subject to instructions given in Merkblatt Stahl 241 and Merkblatt Stahl 258 and DV820/402.

6-3 Rails shall be free from defects adversely affecting their performance in service.

7- Testing:

7-1 Inspection documents:

7-1-1 The issue of an inspection document in compliance with EN 10204 may be agreed upon at the time of ordering. It is common practice to request a test report or an inspection certificate.

7-1-2 The test report shalt include the results of a ladle analysis establishing the percentage content of the chemical elements listed in table 5 ,and those obtained when testing the tensile strength and elongation at break (in accordance with subclause 7.3)

7-1-3 The inspection certificate or inspection report shall include the results of the ladle analysis carried out by the manufacturer. They shall be verified by the inspector to conform with the composition shown in table 5. The certificate/report shall also include results obtained when testing the tensile strength and elongation at break (in accordance with subclause 7.3)

7.2 Sampling:

For rails made of steel grades R0550 to R1100CR, one test piece shall be taken from each cast. For rails made of steel grade R1200, one test piece shall be taken from each heat treatment batch and cast.

7-2-1 Sampling and preparation of test pieces shall be in line with the specifications of EURONORM 18.

Table 2: Tolerance for rail sections

Rail Section No.	Height h_1	Foot Width l	Head Width c_1	Web Thickness, s	Tolerance on asymmetry [2]	Height of fishing surface h_2	Slope of Fishing hamber [2]	End Squareness
S10 S14 S18 S20	±0.5	±1.5	±0.5	±0.5	±0.5	±2.0	3.6%	±0.5
S30 S33 S41 R10 S41 R14 S49	+0.5 -1.0	+0.5 -1.0	+0.6 -0.5	+1.0 -0.5	±1.2	+0.5 -1.0		±0.6
For [1], See Appendix A. For [2], See Appendix B.								

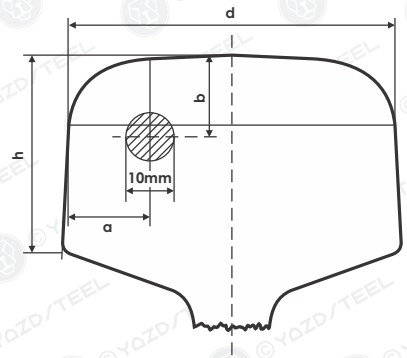

$a = \frac{1}{4} d$

$b = \frac{2}{5} h$

Figure 3: Location of tensile test piece (cf. UIC 860-V)

7-2-2 The test piece, which is to be taken from the rail head as shown in figure 3, shall have a diameter of 10 mm and an initial gauge length of 50 mm. For further specifications regarding the final length and tolerances, refer to DIN 10002-1. 7.3 Tensile testing.

7-3-1 Tensile testing shall be carried out in compliance with EN 10002-1 to determine the tensile strength and elongation at break.

7-3-2 Refer to EN 10021 for specifications regarding retests.

DIN 5901 : 1995-11

Table 3:

Nominal dimensions and limit deviations for fishbolt holes (see figure 2)

Rail section No.	d	Δd Drilled	Δd Punched	V_1	ΔV1 Drilled	ΔV1 Punched	x	z
S10	16	+0.5	+0.5 0	75	0 -0.5	±0.5	35	29.95
S14	16			90			35	35.75
S18	20		1)	90		1)	35	41.4
S20	20			90			35	44.6
S30	25.4			127			63.5	48.25
S33	30			120			61	57
S41 R10	30			165			46	59.5
S41 R14	30			165			46	59.5
S49	30			165			46	62.5

1) The web thickness , requires holes to be drilled.

Table 4: Mass per unit length and static properties

Rail section No.	Momentof inertia in cm^4 I_x	I_y	section Modulus e_x (head)1) in mm	w_x (head) in cm^3	e_x (foot)1) in mm	w_x (foot) in cm^3	w_y in cm^3	Mass per unit length m in kg/m
S10	85.7	14.0	34.98	24.3	35.02	24.3	4.8	10.0
S14	154	27.4	41.81	36.4	38.19	39.9	7.8	14.0
S18	278	47.4	48.40	56.0	44.60	60.8	11.6	18.3
S20	346	52.9	52.07	66.0	47.93	71.6	12.9	19.8
S30	606	152	56.02	108.4	51.98	116.9	28	30.03
S33	1040	151	66.69	155.9	67.31	154.5	29	33.47
S41 R10	1382	265.5	69.35	199.3	68.65	201.3	42.48	41.38
S41 R14	1367	262.2	69.80	195.8	68.20	200.4	41.95	40.95
S49	1819	320	75.61	240.2	73.39	247.5	51	49.43

For1) see figure 1.

Table 5 : Chemical composition , mechanical properties , and recommended steel grades

Steel Name	Steel Material Number	in	Percentage content by mess Carbon	Silicon	Magnesium	phosphor	Sulphur	Chromiom	Minimum Temsile Strength R_n in N/mm^2	Minimum Elongation at break A , as a Percentage	For Rail Sections No.
R0550 1)	1.0422	cast	0.20 to 0.40	0.05 to 0.35	0.60 to 1.10	0.040	0.040	I	540	16	S10 to S20
		test piece	0.18 to 0.43	0.03 to 0.38	0.57 to 1.15	0.045	0.045				
R0700 1)	1.0521	cast	0.40 to 0.60	0.05 to 0.35	0.80 to 1.25	0.040	0.040		680	14	S30 to S49
		test piece	0.37 to 0.63	0.10 to 0.50	0.75 to 1.30	0.045	0.045				
R0900 1)	1.0623	cast	0.60 to 0.80	0.07 to 0.53	0.80 to 1.30	0.040	0.040	I	880	10	
		test piece	0.57 to 0.83	0.30 to 0.90	0.75 to 1.35	0.045	0.045				
R1100Gr 1)	1.0915	cast	0.60 to 0.82	0.27 to 0.93	0.80 to 1.30	0.030	0.030	0.80 to 1.30	1080	9	S41 to S49
		test piece	0.57 to 0.85	0.10 to 0.50	0.75 to 1.35	0.035	0.035	0.75 to 1.35			
R1200 2)	1.0631	cast	0.72 to 0.82	0.07 to 0.53	0.80 to 1.10	0.030	0.030	≤0.20	1175	10	
		test piece	0.70 to 0.85	0.70 to 0.85	0.75 to 1.15	0.035	0.035	≤0.23			

1) untereated
2) isothermal annealing

DIN5901 | Standard Rail Drawing YAZD/TEEL

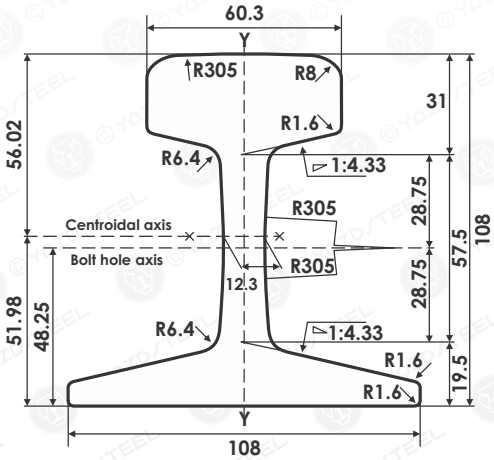

Figure 5 : Rail section No. S 30

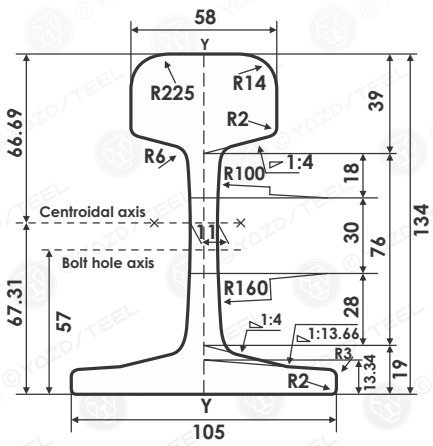

Figure 6 : Rail section No. S 33

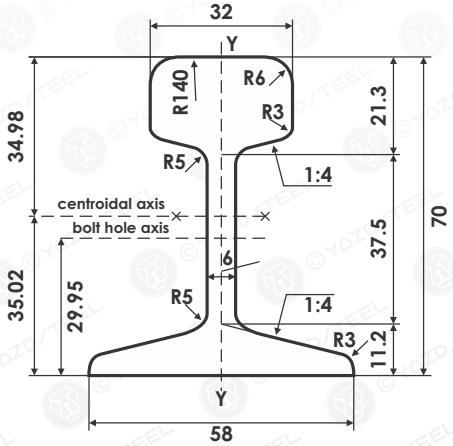

Figure 1: Rail section No. S10

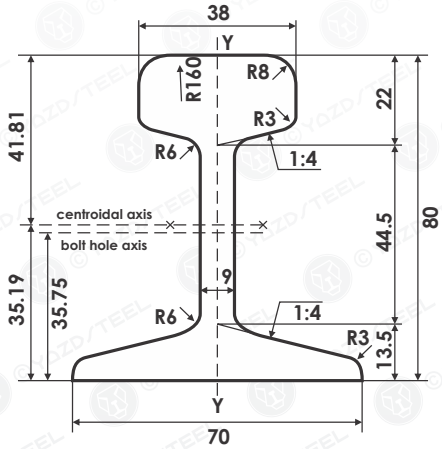

Figure 2: Rail section No. S14

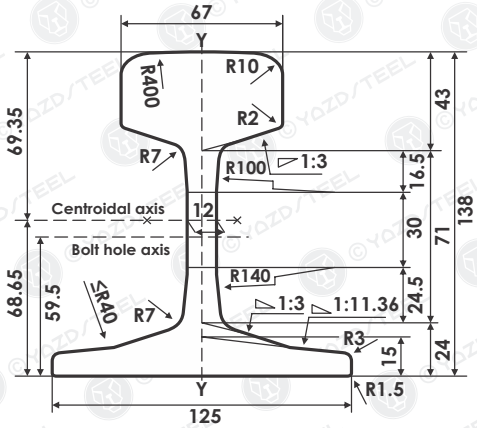

Figure 8 : Rail section No. S 49

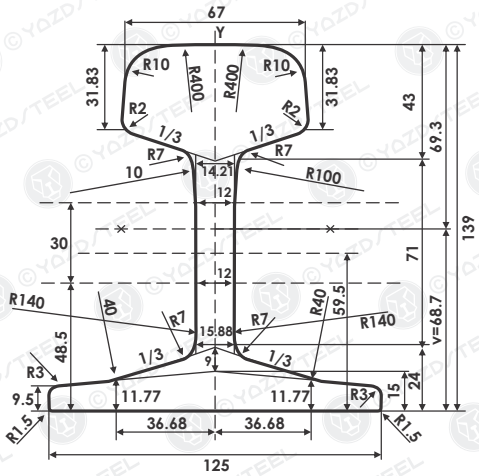

Figure 7 : Rail section No. S 41

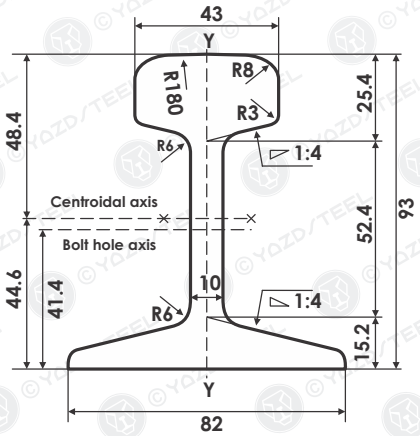

Figure 3 : Rail section No. S 18

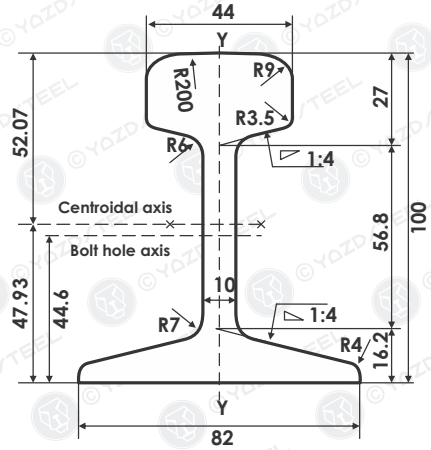

Figure 4 : Rail section No. S 20

GB11264-89 | Standard Rail YAZD/TEEL

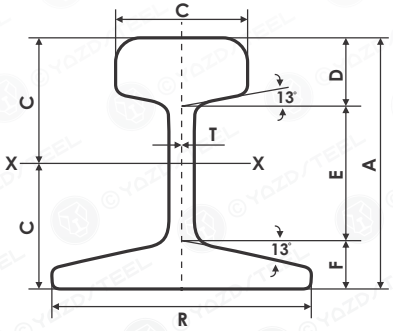

Kg/m	A	B	C	D	E	F	t	A	V	C	e	I	Z	i
	mm							cm^2	kg/m	cm	cm	cm^4	cm^3	cm
9	63.50	63.50	32.10	17.48	35.72	10.30	5.90	11.39	8.94	3.09	3.26	62.41	19.10	2.33
12	69.85	69.85	38.10	19.85	37.70	12.30	7.54	15.54	12.20	3.40	3.59	98.82	27.60	2.51
15	79.37	79.37	42.86	22.22	43.65	13.50	8.33	19.33	15.20	3.89	4.05	156.10	38.60	2.83
22	93.66	93.66	50.80	26.99	50.0	16.67	10.72	28.39	22.30	4.52	4.85	339.0	69.60	3.45
30	107.95	107.95	60.33	30.95	57.54	19.45	12.30	38.32	30.10	5.21	5.59	606.0	108.0	3.98

Tolerance (mm)

TYPE	9 , 12Kg/m	15 , 22 , 30Kg/m
A	+1.25 -0.75	+1.0 -0.5
C	±1.0	±0.75
T	+1.0 -0.25	+0.75 -0.25
B	±2.0	±2.0
F	±0.75	±0.75
E	+1.0 -0.75	±0.75
D	±0.5	±0.5
R	±1.0	±0.75

Mechanical Test

material	Kg/m	Mpa	HB	????
50Q	<12	–	–	–
55Q	<12	–	–	–
	15~30	>685	>197	–
45 Si,Mn,P	<12	–	–	–
50 Si,Mn,P	<12	–	–	–
	15~30	>685	>197	–
36 Cu,Cr,P	15~30	>785	>220	–

Material

Kg/m		C	Si	Mn	P	S	Cu	Cr
50Q	<12	0.35~0.60	0.15~0.35	>0.40	<0.045	<0.050	<0.40	–
55Q	<30	0.50~0.60	0.15~0.35	0.60~0.90	<0.045	<0.050	<0.40	–
45 Si,Mn,P	<12	0.35~0.55	0.50~0.80	0.60~1.00	<0.12	<0.050	<0.40	–
50 Si,Mn,P	<30	0.45~0.58	0.50~0.80	0.60~1.00	<0.12	<0.050	<0.40	–
36 Cu,Cr,P	15~30	0.31~0.42	0.50~0.80	0.60~1.00	0.02~0.06	<0.040	0.10~0.30	0.80~1.20

Tel: +98 21 66 69 5000
Fax: +98 21 66 62 9067
www.yazdsteel.com
info@yazdsteel.com

JIS-GB11264-89 | Standard Rail Drawing YAZD/TEEL

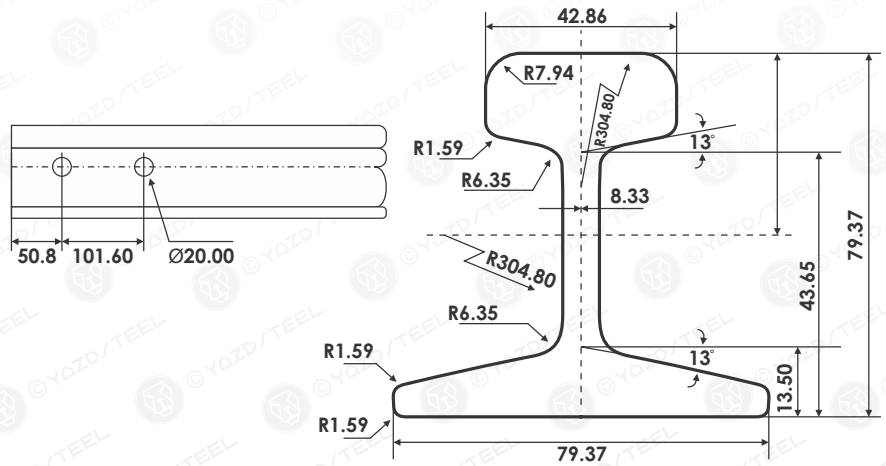

JIS 15 (15Kg/m)

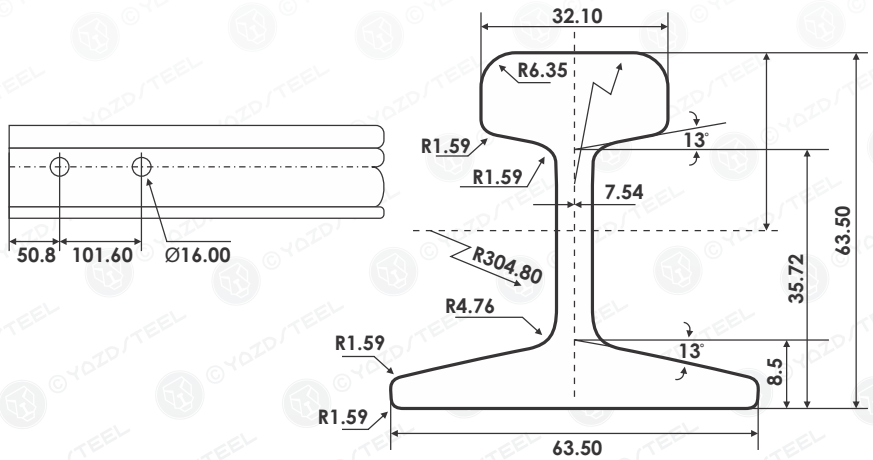

JIS 9 (9Kg/m)

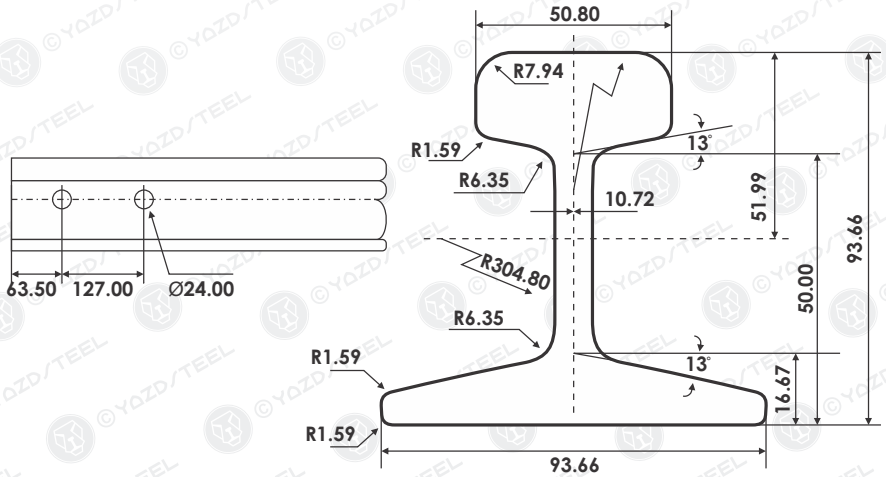

JIS 22 (22Kg/m)

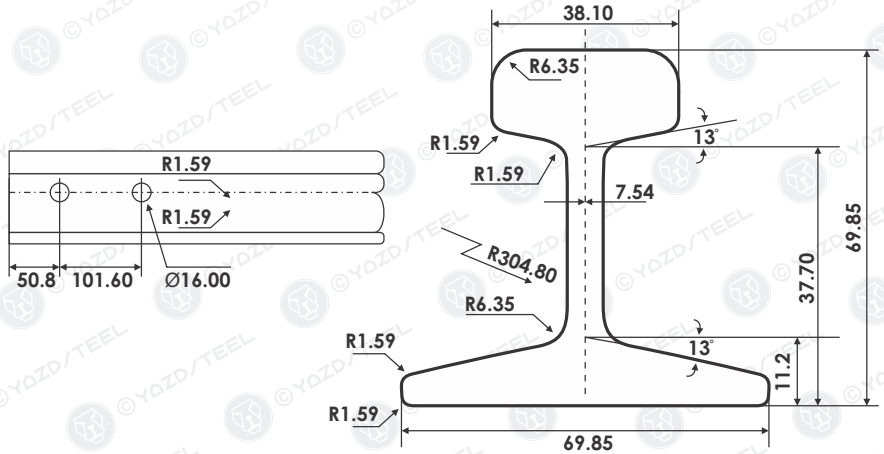

JIS 12 (12Kg/m)

Mechanical Properties

Grade	Yield strength (Mpa)	Tensile strength (Mpa)	Elongation(%)	Hardness(HB)
Q235	≥235	375~460	≥26	—
Q345	≥345	470-630	≥21	—
20MnK	≥355	≥510	≥18	—
M540	≥390	≥540	≥18	—
50Mn	—	≥645	≥13	—
55Q	—	≥685	—	≥1197
U71Mn	—	≥880	≥9	240-270
U75V	—	≥980	≥9	270-300
900A	—	≥880	≥10	Min 260
R260	—	≥880	≥10	260-300
R350HT	—	≥1175	≥9	350-390
ASSZ-1	—	≥980	≥9	≥275

Chemical Composition

Grade	C	Si	Mn	Max P	Max S	Max V
Q235	0.12-020	≤0.30	0.30-0.70	0.045	0.045	—
Q345	≤0.20	≤0.55	1.00-1.60	0.040	0.040	—
20MnK	0.15-0.26	020-0.60	1.20-1.60	0.050	0.050	—
M540	0.20-029	0.17-0.37	1.60-1.80	0.045	0.045	—
50Mn	0.48-0.56	0.17-0.37	0.70-1.00	0.035	0.035	—
55Q	0.50-0.60	0.15-0.35	0.60-0.90	0.045	0.050	—
U71Mn	0.65-0.76	0.15-0.35	1.10-1.40	0.040	0.040	—
U75V	0.71-0.80	0.50-0.80	0.70-1.05	0.030	0.030	0.04-0.12
900A	0.60-0.80	0.10-0.50	0.80-1.30	0.040	0.040	—
R260	0.60-0.82	0.13-0.60	0.65-1.25	0.030	0.030	—
R350HT	0.70-0.82	0.13-0.60	0.60-1.25	0.025	0.025	—
ASSZ-1	0.76-0.82	0.10-0.50	0.90-1.15	0.030	0.030	—

05

Rail Specification and Rail Drawings

مشخصات و نقشه های ریل ها

Tel: +98 21 66 69 5000
Fax: +98 21 66 62 9067
www.yazdsteel.com
info@yazdsteel.com

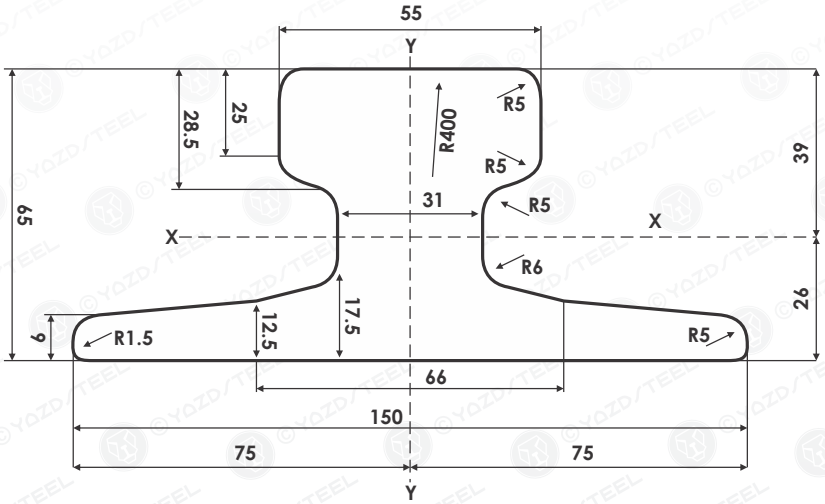

RAIL A55 (31.8 Kg/m)

MECHANICAL PROPERTIES			
Tensile Strength (Min.): N/mm^2	690	Section Modulus - Foot:	68.5 cm^3
Yield Point (Min.): N/mm^2	355	Section Modulus - Head:	45.6 cm^3
Moment of Inertia: Ix	178.0 cm^4	Elongation (%):	12 min.
Moment of Inertia: Iy	337 cm^4	Area:	40.5 cm^2
Standard Length:	**12.00 m**	**Calculated Mass:**	**31.8 Kg/m**

CHEMICAL COMPOSITION (%) Indicative					
	Carbon	Silicon	Manganese	Phosphorus	Sulphur
(Gr 70)	0.40 - 0.60	0.40 max	0.80 - 1.20	0.045 max	0.045 max

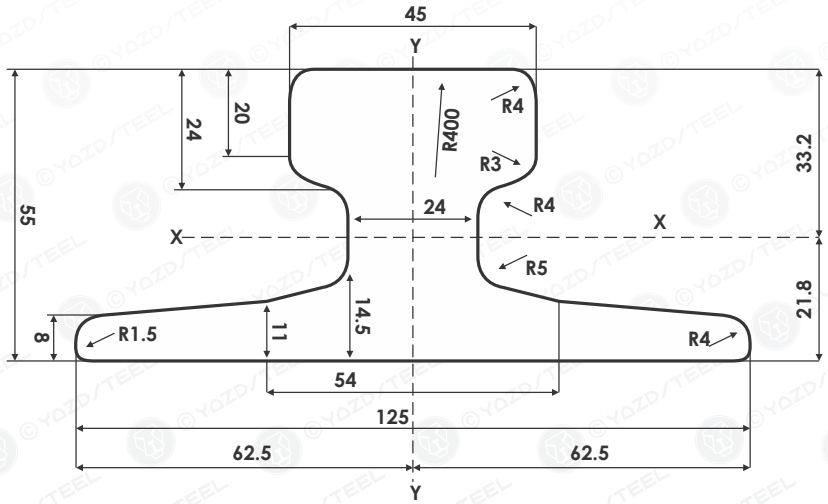

RAIL A45 (22.1 Kg/m)

MECHANICAL PROPERTIES			
Tensile Strength (Min.): N/mm^2	690	Section Modulus - Foot:	41.5 cm^3
Yield Point (Min.): N/mm^2	355	Section Modulus - Head:	27.0 cm^3
Moment of Inertia: Ix	90.0 cm^4	Elongation (%):	12 min.
Moment of Inertia: Iy	170.0 cm^4	Area:	28.2 cm^2
Standard Length:	**12.00 m**	**Calculated Mass:**	**22.1 Kg/m**

CHEMICAL COMPOSITION (%) Indicative					
	Carbon	Silicon	Manganese	Phosphorus	Sulphur
(Gr 70)	0.40 - 0.60	0.40 max	0.80 - 1.20	0.045 max	0.045 max

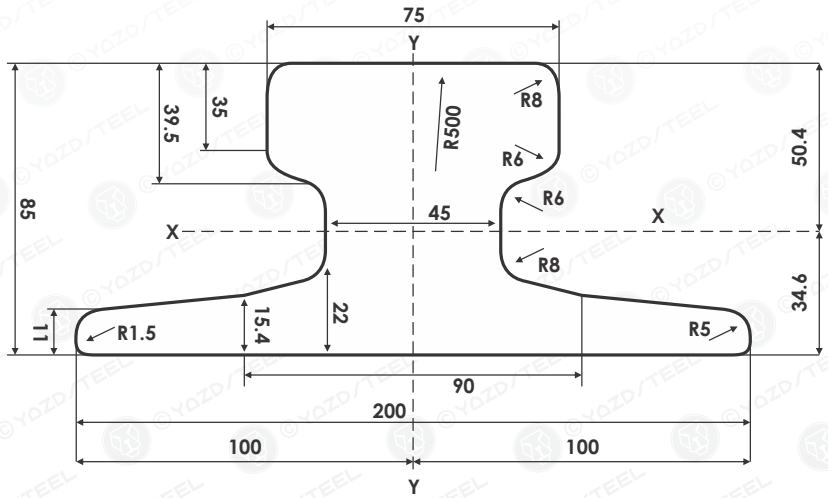

RAIL A75 (56.2 Kg/m)

MECHANICAL PROPERTIES			
Tensile Strength (Min.): N/mm^2	690 , 880	Section Modulus - Foot:	153.5 cm^3
Yield Point (Min.): N/mm^2	355 , 440	Section Modulus - Head:	105.4 cm^3
Moment of Inertia: Ix	531.0 cm^4	Elongation (%):	12 min.
Moment of Inertia: Iy	1011.0 cm^4	Area:	71.6 cm^2
Standard Length:	**12.00 m**	**Calculated Mass:**	**56.2 Kg/m**

CHEMICAL COMPOSITION (%) Indicative	Carbon	Silicon	Manganese	Phosphorus	Sulphur
(Gr 70)	0.40 - 0.60	0.40 max	0.80 - 1.20	0.045 max	0.045 max
(Gr 90)	0.60 - 0.80	0.40 max	0.80 - 1.20	0.045 max	0.045 max

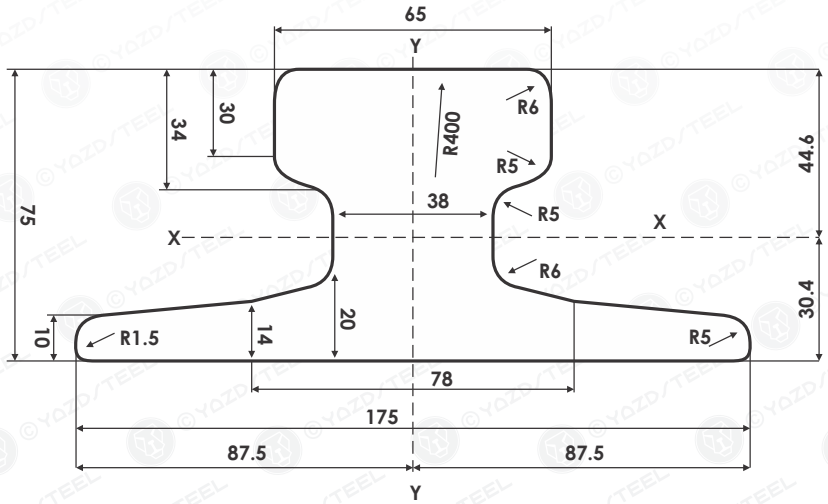

RAIL A65 (43.1 Kg/m)

MECHANICAL PROPERTIES			
Tensile Strength (Min.): N/mm^2	690 , 880	Section Modulus - Foot:	105.3 cm^3
Yield Point (Min.): N/mm^2	355 , 440	Section Modulus - Head:	71.4 cm^3
Moment of Inertia: Ix	319.0 cm^4	Elongation (%):	12 min.
Moment of Inertia: Iy	608.0 cm^4	Area:	54.9 cm^2
Standard Length:	**12.00 m**	**Calculated Mass:**	**43.1 Kg/m**

CHEMICAL COMPOSITION (%) Indicative	Carbon	Silicon	Manganese	Phosphorus	Sulphur
(Gr 70)	0.40 - 0.60	0.40 max	0.80 - 1.20	0.045 max	0.045 max
(Gr 90)	0.60 - 0.80	0.40 max	0.70 - 1.25	0.075 max	0.045 max

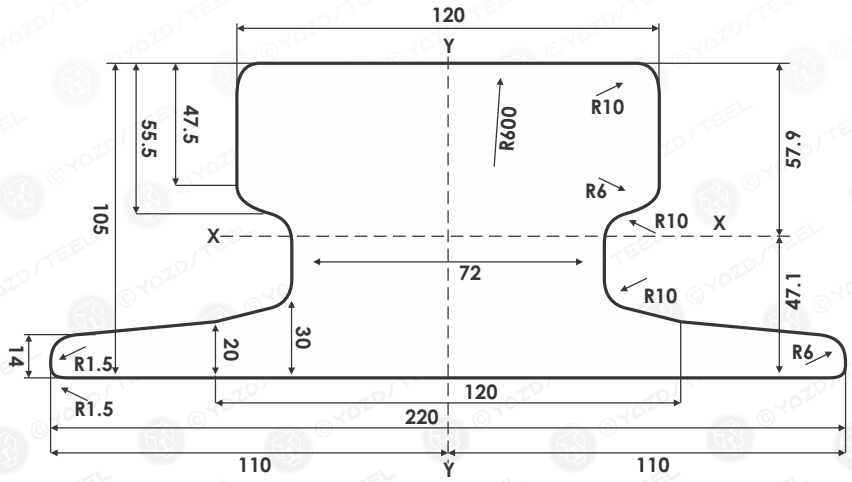

RAIL A120 (100 Kg/m)

MECHANICAL PROPERTIES			
Tensile Strength (Min.): N/mm^2	690 , 880	Section Modulus - Foot:	289.0 cm^3
Yield Point (Min.): N/mm^2	355 , 440	Section Modulus - Head:	235.1 cm^3
Moment of Inertia: Ix	1361.0 cm^4	Elongation (%):	8 min.
Moment of Inertia: Iy	2350.0 cm^4	Area:	127.4 cm^2
Standard Length:	**12.00 m**	**Calculated Mass:**	**100.0 Kg/m**

CHEMICAL COMPOSITION (%) Indicative	Carbon	Silicon	Manganese	Phosphorus	Sulphur
(Gr 70)	0.40 - 0.60	0.40	0.80 - 1.25	0.045 max	0.045 max
(Gr 90)	0.60 - 0.80	0.10 - 0.40	0.70 - 1.25	0.045 max	0.045 max

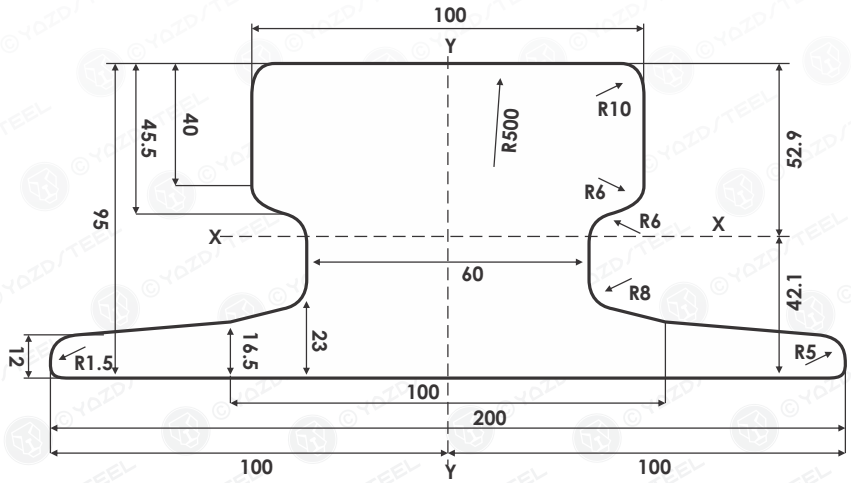

RAIL A100 (74.3 Kg/m)

MECHANICAL PROPERTIES			
Tensile Strength (Min.): N/mm^2	690 , 880	Section Modulus - Foot:	203.8 cm^3
Yield Point (Min.): N/mm^2	355 , 440	Section Modulus - Head:	162.2 cm^3
Moment of Inertia: Ix	858.0 cm^4	Elongation (%):	8 min.
Moment of Inertia: Iy	1345.0 cm^4	Area:	94.7 cm^2
Standard Length:	**12.00 m**	**Calculated Mass:**	**74.3 Kg/m**

CHEMICAL COMPOSITION (%) Indicative	Carbon	Silicon	Manganese	Phosphorus	Sulphur
(Gr 70)	0.40 - 0.60	0.40	0.80 - 1.25	0.045 max	0.045 max
(Gr 90)	0.60 - 0.80	0.10 - 0.40	0.70 - 1.25	0.045 max	0.045 max

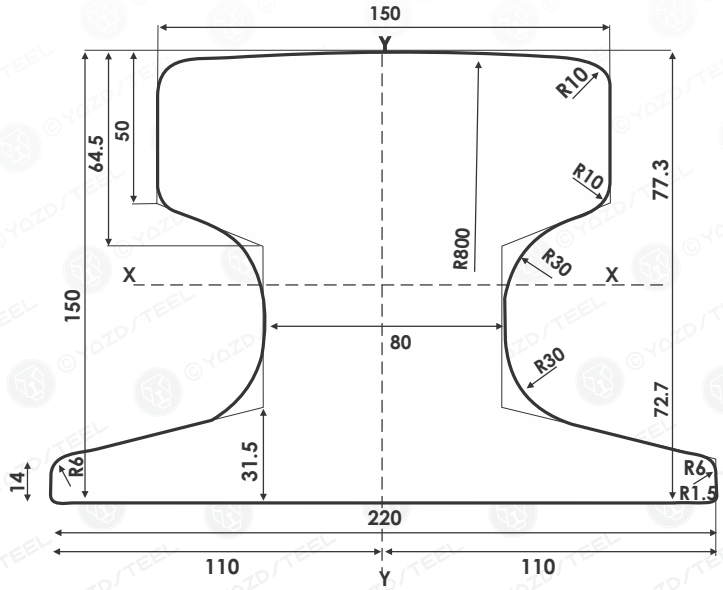

RAIL A150 (150.3 Kg/m)

MECHANICAL PROPERTIES			
Tensile Strength (Min.): N/mm^2	880	Section Modulus - Foot:	601.5 cm^3
Yield Point (Min.): N/mm^2	440	Section Modulus - Head:	565.7 cm^3
Moment of Inertia: Ix	4373.0 cm^4	Elongation (%):	8 min.
Moment of Inertia: Iy	3805.0 cm^4	Area:	191.4 cm^2
Standard Length:	**12.00 m**	**Calculated Mass:**	**150.3 Kg/m**

CHEMICAL COMPOSITION (%) Indicative					
	Carbon	**Silicon**	**Manganese**	**Phosphorus**	**Sulphur**
(GR 90)	0.60 - 0.80	0.50 max	0.80 - 1.70	0.045 max	0.045 max

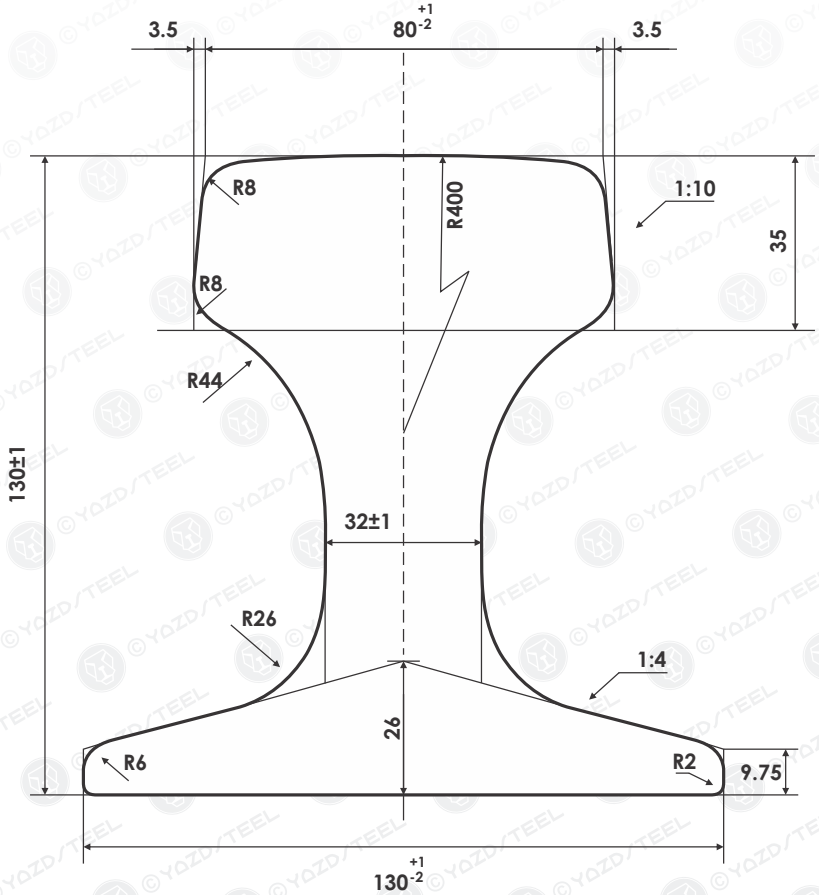

Material: U71 Mn
Min 880 N/mm²

KP - QU80 (64 Kg/m)

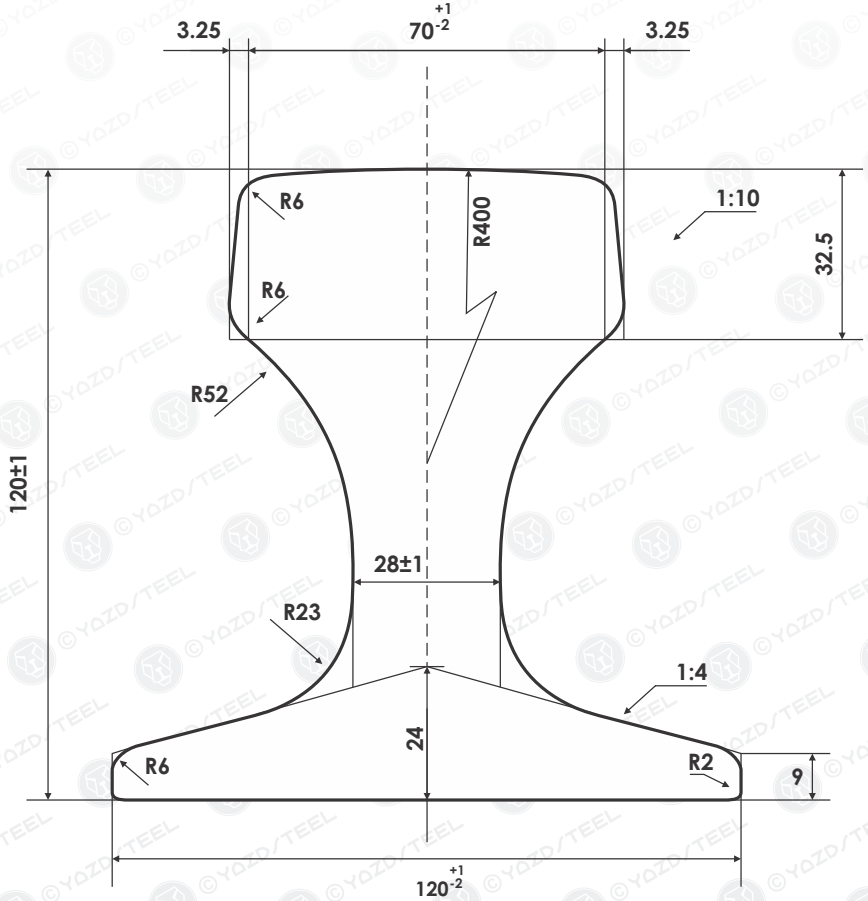

Material: U71 Mn
Min 880 N/mm²

KP - QU70 (53 Kg/m)

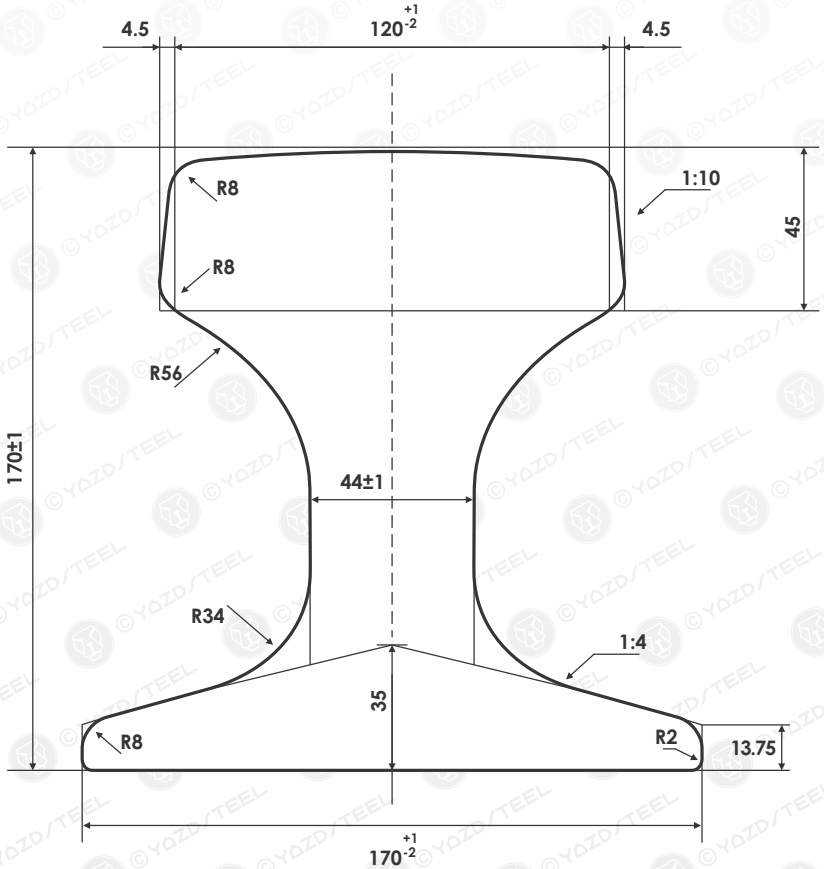

Material: U71 Mn
Min 880 N/mm²

KP - QU120 (118 Kg/m)

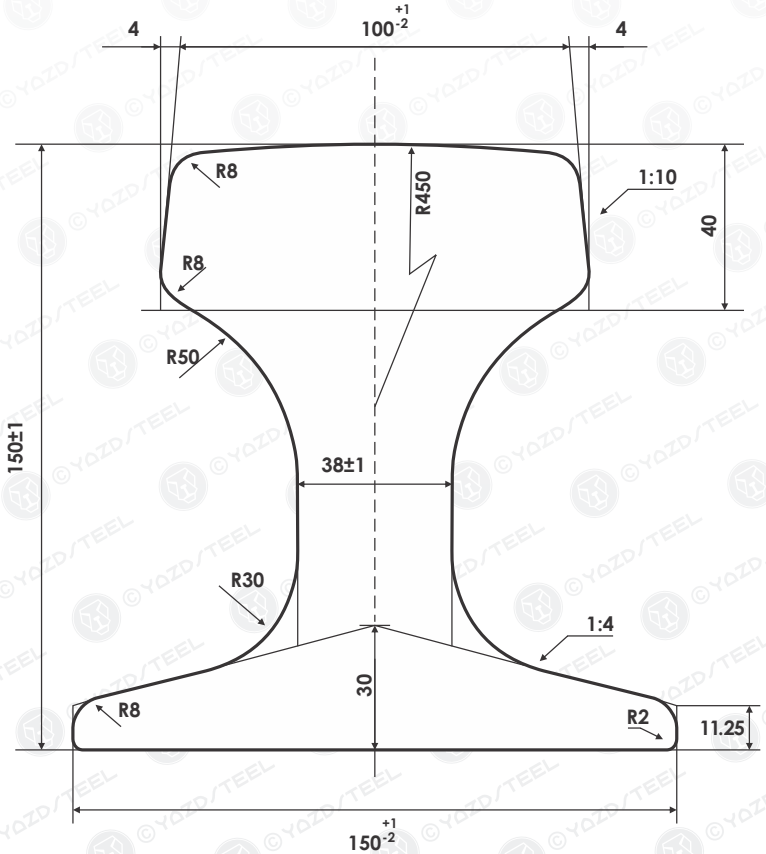

Material: U71 Mn
Min 880 N/mm²

KP - QU100 (89 Kg/m)

06

Drawing and Compare

مقایسه نقشه ها

Tel: +98 21 66 69 5000
Fax: +98 21 66 62 9067
www.yazdsteel.com
info@yazdsteel.com

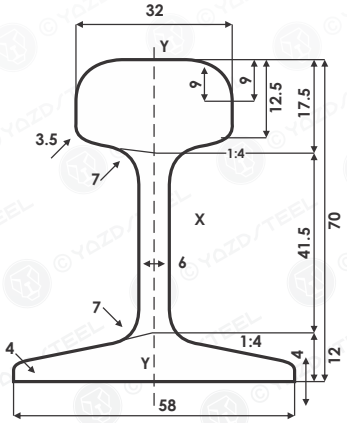

S 10-10 Kg/m

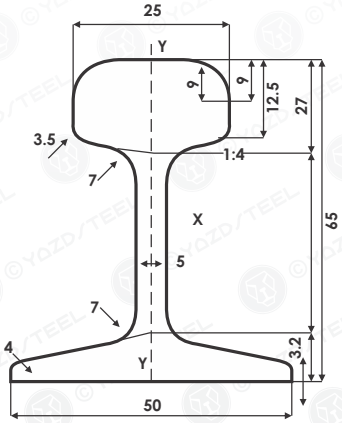

S 7-7 Kg/m

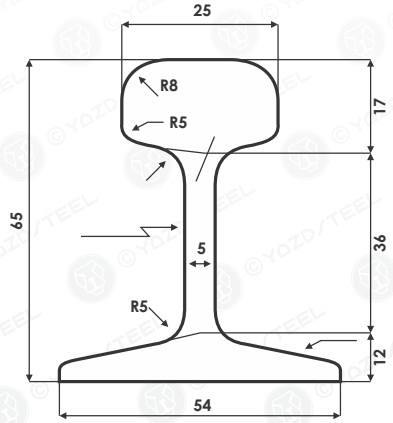

JIS 8 - 8 kg/m

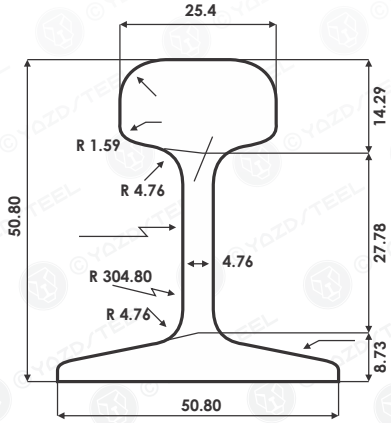

JIS 6 - 6 kg/m

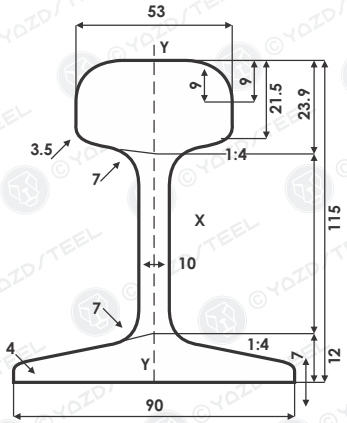

S 24-24 Kg/m

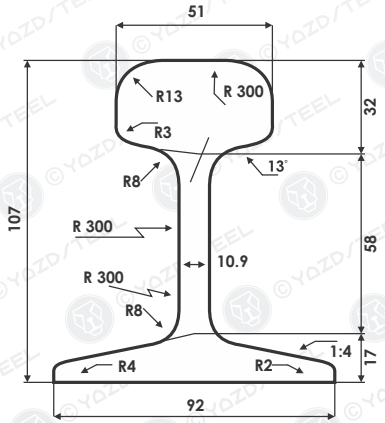

JIS 24 I 24 kg/m

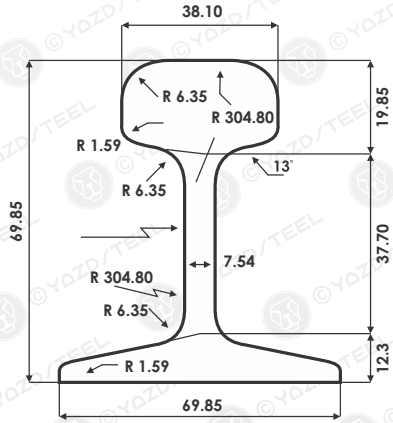

JIS 12 - 12 kg/m

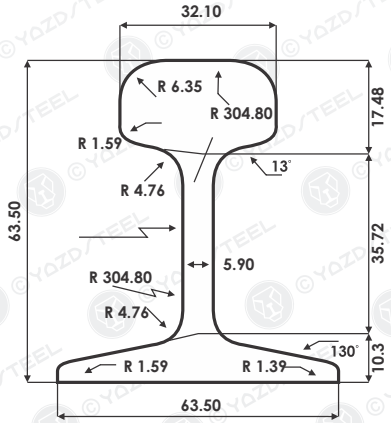

JIS 9 - 9 kg/m

Compare Rails | COMPARE DRAWS YAZD/TEEL

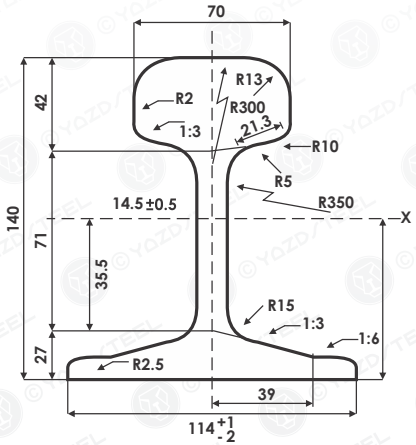

R 43 / P 43-43kg/m

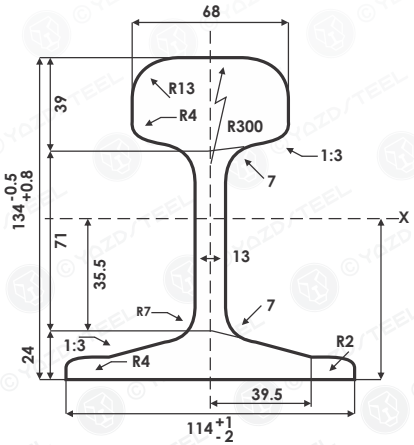

R 38-38 kg/m

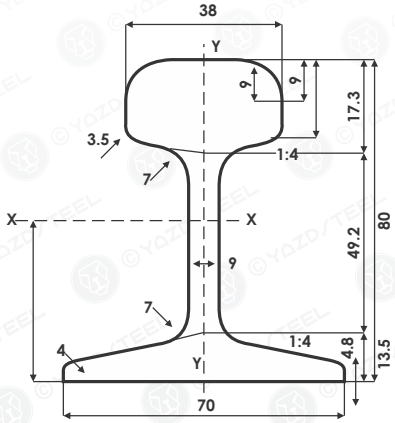

S14-14Kg/m

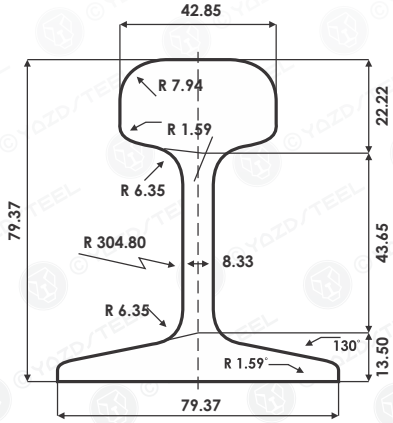

JIS15-15kg/m

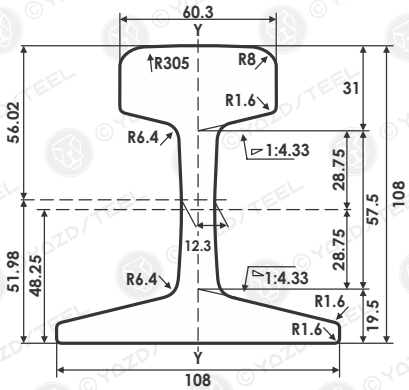

S30/JIS30-30Kg/m

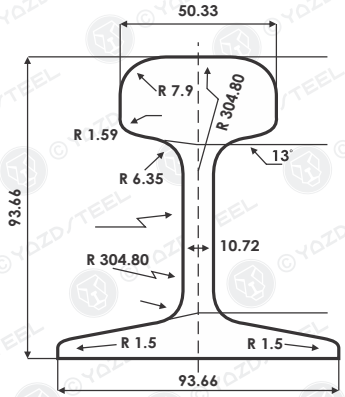

R22-22Kg/m

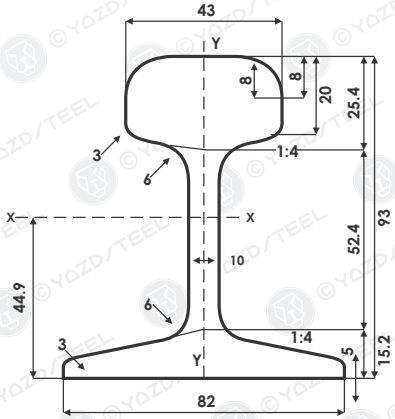

S18-18.30 kg/m

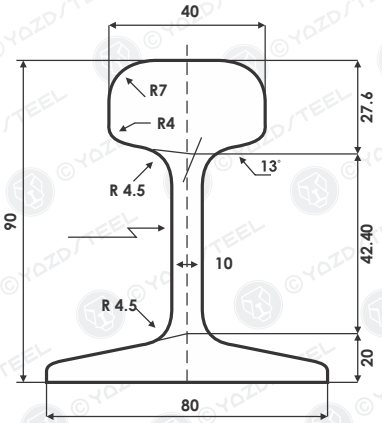

R18 / JIS18-18 kg/m

Compare Rails | COMPARE DRAWS YAZD/TEEL

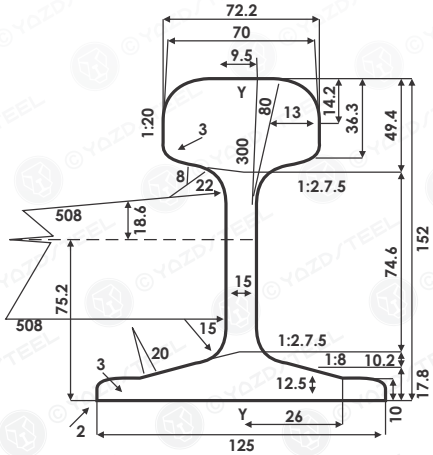

UIC 50-50.2 kg/m

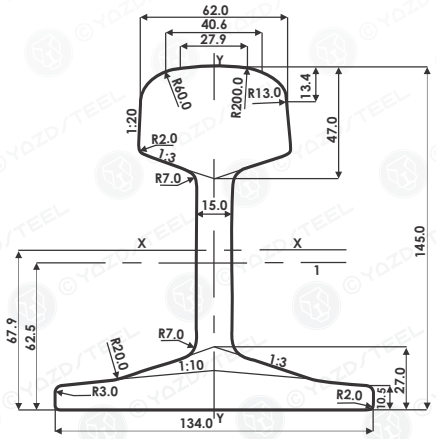

U33/46E2-46.27 kg/m

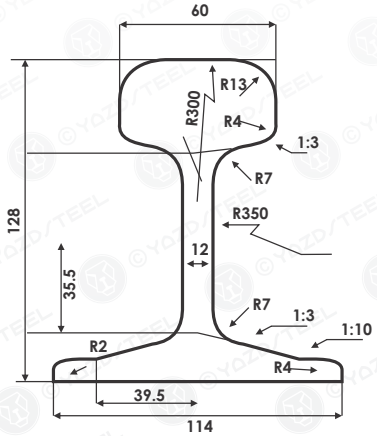

R 33-33 kg/m

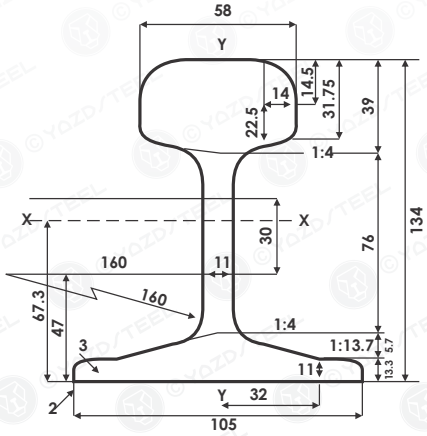

S 33-33 kg/m

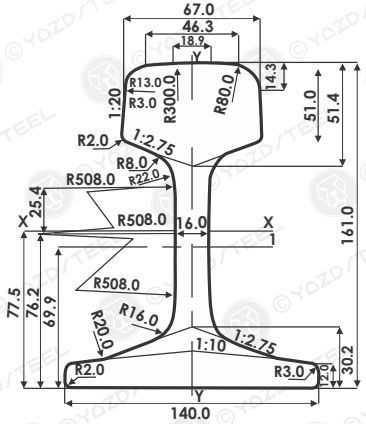

UIC 54 E2 - 54.4 kg/m

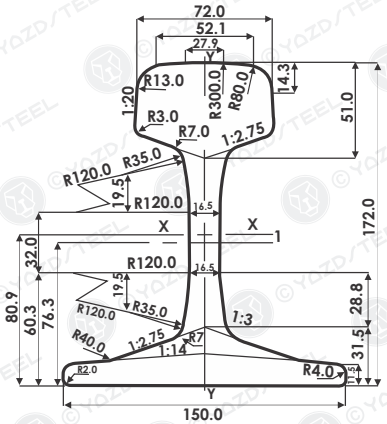

UIC 60 -60E1- 60.3 kg/m

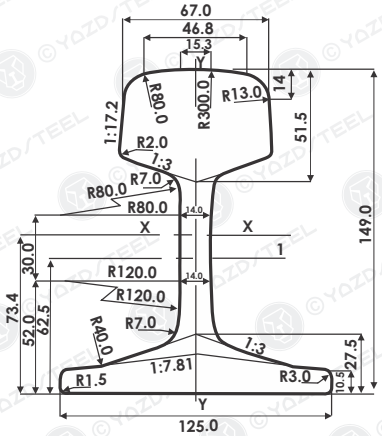

S49/49E1-49.43kg/m

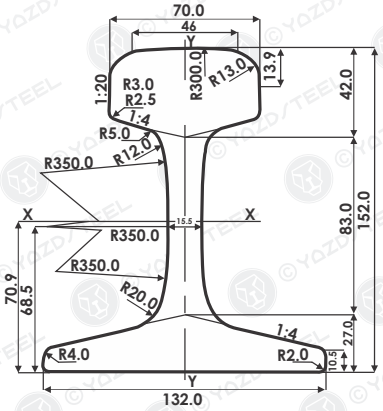

R50 / P50-51.67kg/m

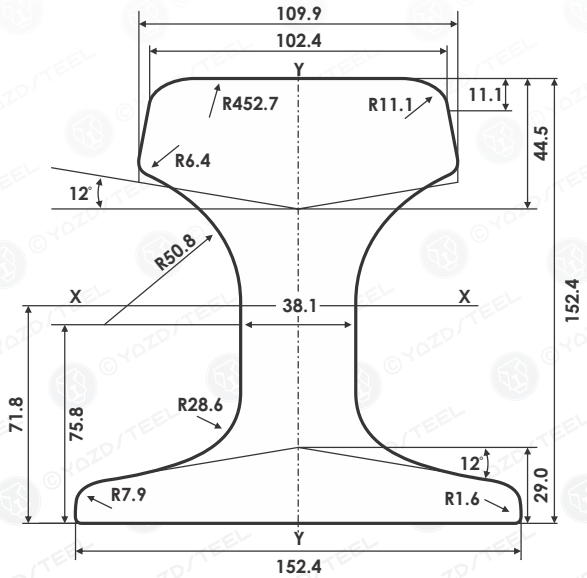

MRS 87B

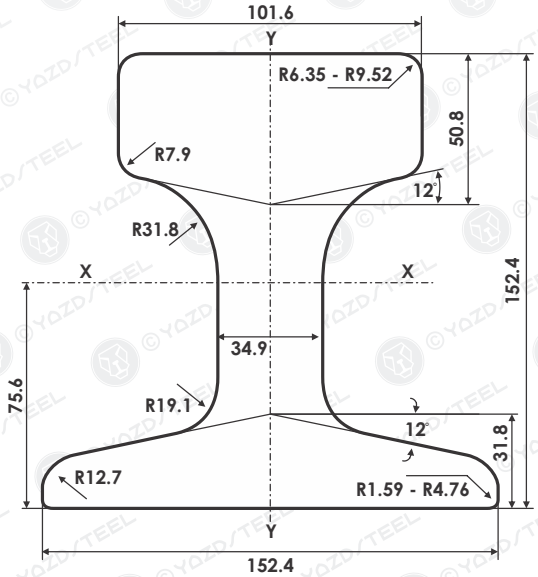

MRS 87A

Compare Rails | COMPARE DRAWS YAZD/TEEL

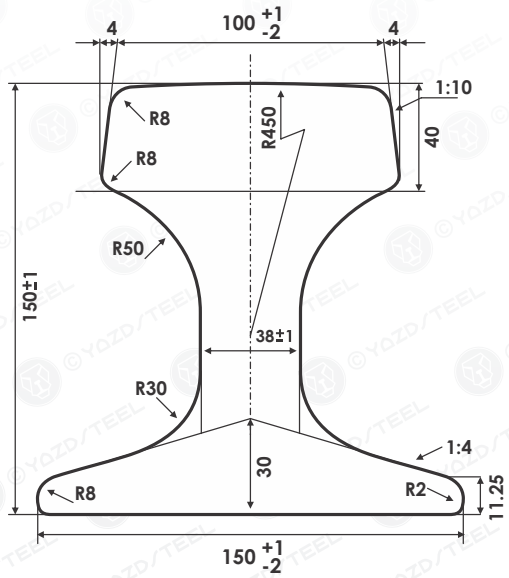

QU100

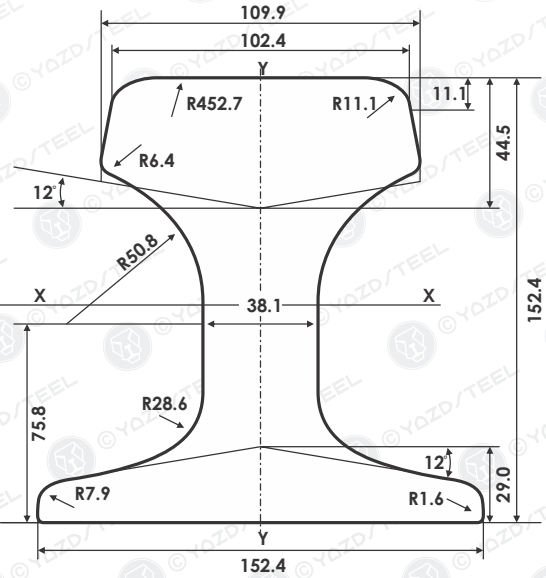

CR175

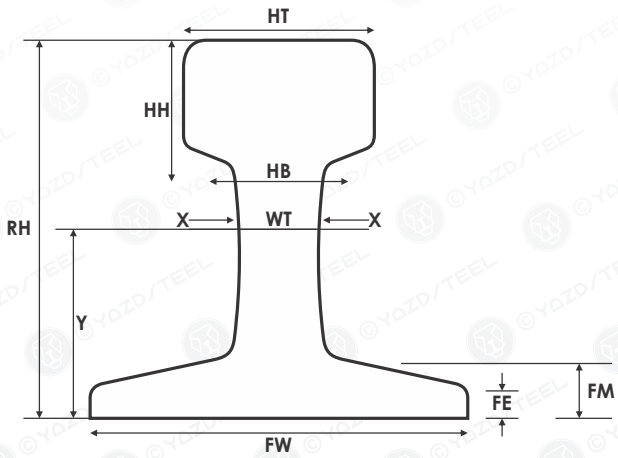

Rail Type	Rail Height (RH)	Flange Width (FW)	head Width at Top (HT)	head Width at Base (HB)	head Height (HH)	Web Thickness (WT)	Flange Thickness at Edge (FE)	Flange Thickness at Center (FM)	Weight Per Meter (Kg)
MRS51 rail	127	127	64	30.8	30.8	25	12.3	27	51.6
MRS52 rail	132	132	65	37.7	37.7	24	10.2	25.4	52.1
MRS67 rail	146	132	76	37.5	37.5	32	11.9	27	67
MRS73 rail	157	146	70	33	33	32	17	—	73.6
MRS77 rail	100	200	100	37	37	60	12	23	77.0
MRS85 rail	152	152	102	39.2	39.2	32	15.6	31.8	84.8
MRS87A rail	152	152	102	40	40	35	15.6	31.8	86.8
MRS87B rail	152	152	102	33	33	38	12.7	29	86.8
MRS125 rail	180	180	120	52	52	40	21	40	125
MRS127 rail	180	180	120	52	52	40	25	—	127
MRS151 rail	150	220	150	50	50	80	14	31.5	151

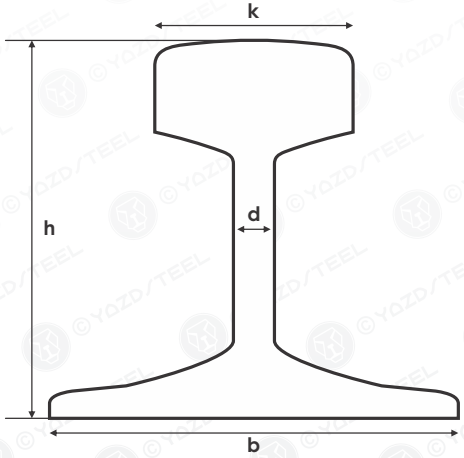

Rail Type	h	b	k	d	kg/m	Standard
R5	52	38	20	4.5	4.64	GOST 19240-73
R8	65	54	25	7	8.42	GOST 6368-82
R11	80.5	66	32	7	11.18	GOST 6368-82
R18	90	80	40	10	17.90	GOST 6368-82
R24	108	92	51	10.5	24.90	GOST 6368-82
R33	128	114	60	12	33.48	TU 14-2-190-75
R38	135	114	68	13	38.42	TU 14-2-706-86
R43	140	114	70	14.5	44.65	GOST 7173-54
R50	152	132	72	16	51.67	GOST 7174-75
R65	180	150	75	18	64.72	GOST 8161-75
R75	192	150	75	20	74.41	GOST 16210-77

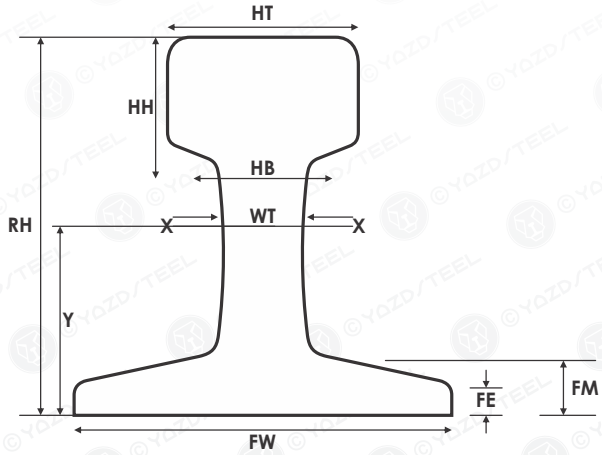

Rail Type	Rail Height (RH)	Flange Width (FW)	head Width at Top (HT)	head Width at Base (HB)	head Height (HH)	Web Thickness (WT)	Flange Thickness at Edge (FE)	Flange Thickness at Center (FM)	Weight Per Meter (Kg)
CR73 rail	135	140	100	100	34.5	32	13	26.5	73
CR100 rail	150	155	120	108	42.9	39	17	30	100
GCR108 rail	100	263	75	—	40	20	10.5	—	108
GCR183 rail	120	280	75	—	55	65	16	—	183
CR104 Lb	127	127	63.5	NA	NA	NA	NA	NA	104 Lb/yb
CR105 Lb	131.8	131.8	65.1	NA	NA	NA	NA	NA	—
CR135 Lb	146	131.8	78.1	NA	NA	NA	NA	NA	135 Lb/yb
CR171 Lb	152.4	152.4	101.6	NA	NA	NA	NA	NA	—
CR175 Lb	152.4	152.4	102.2	NA	NA	NA	NA	NA	175 Lb/yb

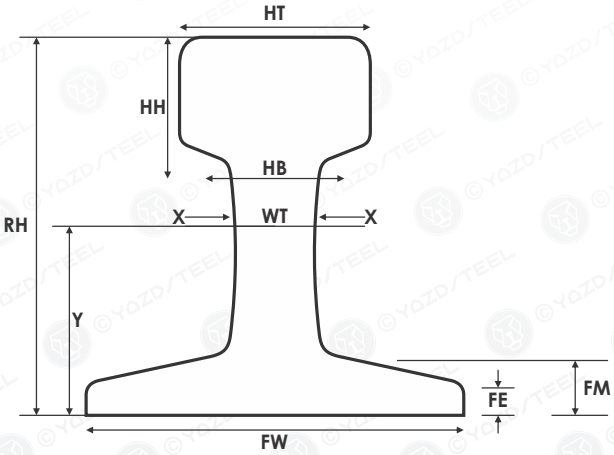

Rail Type	Rail Height (RH)	Flange Width (FW)	head Width at Top (HT)	head Width at Base (HB)	head Height (HH)	Web Thickness (WT)	Flange Thickness at Edge (FE)	Flange Thickness at Center (FM)	Weight Per Meter (Kg)
S7 rail	65	50	25	25	12.5	5	3.2	—	6.75
S10 rail	70	58	32	32	17.3	6	4	11.2	10
S14 rail	80	70	38	38	17.3	9	4.8	13.5	14
S18 rail	93	82	43	43	20	10	5	15.2	18.3
S20 rail	100	82	44	44	21.5	10	6	16.2	19.8
S24 rail	115	90	53	53	23.9	10	7	—	24.4
S30 rail	108	108	60.3	60.3	24	12.3	7	—	30
S33 rail	134	105	58	58	31.75	11	9.5	13.3	33.4
S36 rail	153	140	65	65	38	15.5	11.2	—	50.6
S40 rail	128	115	60	60	30.5	13	10	—	36.5
S41/14 rail	138	125	67	67	31.8	12	9.5	—	41
S41/10 rail	138	125	67	67	31.8	12	9.5	15.3	41.4
S49 rail	149	125	67	67	39.8	14	10.5	27.5	49.4
S54 rail	154	125	65.8	65.8	43.3	16	12	—	54.5
S64 rail	172	150	73	73	43	16	13	—	64.9

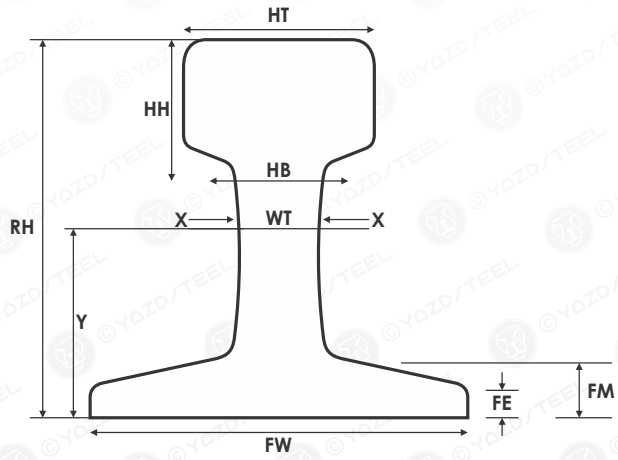

Rail Type	Rail Height (RH)	Flange Width (FW)	head Width at Top (HT)	head Width at Base (HB)	head Height (HH)	Web Thickness (WT)	Flange Thickness at Edge (FE)	Flange Thickness at Center (FM)	Weight Per Meter (Kg)
BS 50'0' rail	100	100	52.4	52.4	26.9	10.3	7.1	12.1	24.89
BS 60'R' rail	114.3	109.5	57.2	57.2	26.2	11.1	7.5	16.67	29.82
BS 50'0' rail	114.3	109.5	57.2	58.67	25.2	11.1	7.5	16.67	30.62
BS 60A rail	123.8	111.1	60.3	62.23	28.5	12.3	7.9	15.08	34.81
BS 70A rail	128.6	122.2	61.9	61.9	29.5	13.1	8.3	18.65	37.04
BS 75R rail	128.6	114.3	61.9	63.75	30.5	12.7	8.3	15.48	37.46
BS 75A rail	127	127	63.5	63.5	32.5	13.9	10.3	16.59	39.81
BS 80'0' rail	133.4	127	63.5	63.5	30.2	13.5	8.7	19.45	39.67
BS 80'R' rail	133.4	117.5	63.5	65.53	30.5	13.1	8.7	16.27	39.76
BS 80A rail	142.9	136.5	66.7	66.7	32.5	13.9	9.1	20.6	44.51
BS 90R rail	142.9	127	66.7	68.83	33.5	13.9	9.1	17.07	45.1
BS 90A rail	147.6	141.3	68.3	68.3	33.8	14.3	9.1	21.03	47.14
BS 95R rail	147.6	139.7	69.9	69.9	32.5	13.9	9.1	17.46	46.95
BS 95N rail	152.4	133.35	69.85	72.14	35.81	15.08	9.52	16.27	50.18
BS 100A rail	152.4	146.05	69.85	69.85	35.05	14.29	9.13	21.43	49.53
BS 110A rail	158.75	139.7	69.85	72.14	36.07	15.87	11.11	18.26	54.52
BS 113A rail	158	139.7	69.9	72.14	36.1	20	11.1	18.26	56.4

07

Rail Welding Reference

مرجع جوشکاری ریل ها

Tel: +98 21 66 69 5000
Fax: +98 21 66 62 9067
www.yazdsteel.com
info@yazdsteel.com

Crane Rail Welding And rail Steels:

Crane rails are typically supplied in 10 or 12 meter lengths but cranes run best on continuously welded rail. Crane rails are made from hard steels, which contain high percentages of carbon and other elements that make welding more difficult.
Thus the choice of rail, steel or strength grade and welding process is important in designing a crane rail installation. All crane rail welds should weld the full cross sectional area of the rail. Partial penetration welds almost always fail early in their service life.

Rail Steels:

Crane rail steels are formulated to give high wear resistance together with a suitable tensile strength. One of the largest suppliers sells in the strength ranges from 690 N/mm² to 1100N/mm². But most crane rails used are either 700 or 900 N/mm2 grade nominally. These correspond to hardness values of 207 and 265 Brinell or 207 and 270 Vickers. For heavier duty applications the higher grades tend to be used. Steel producers use both ultimate tensile strength and hardness in their quality control checking of rails.
However, they typically specify rails by tensile strength only. The rail user requires the rail to be hard and hence hard wearing and is normally less worried by tensile strength, other than as a means of proving the correct grade is in use.

Stresses in Crane Rails:

The welds for joining crane rails need to be suitable for the stresses to which the rail will be subjected. There are four frequently encountered mounting systems for crane rails, which influence the stress they must carry:

- Continuous rail on continuous steel support
- Continuous rail on continuous elastomeric pad on continuous steel support.
- Discontinuously rail supported on individual steel soleplates.
- Discontinuously rail supported on elastomeric pad on individual soleplates.

Unlike the railway where rails are mounted on elastic pad places on concrete and wooden sleepers, crane rails are not mounted directly on concrete.
In all cases the rail will be subject to bending stresses as well as the compressive stresses at the head. But it is only in continuously welded rail that is not mounted on pad that the strength in bending is unimportant. Thus it is good practice to adopt sound welding methods for all rail joints.

Rail Welding Methods:

Rails steels have carbon contents, which are very much higher than steels used for most other engineering purposes. Thus the welding techniques and consumables have developed to meet these needs. Three techniques are commonly used:

- Puddle Arc also called Enclosed Arc
- Aluminothermic
- Flash butt

Crane Rail Welding Methods:

A number of different rail welding processes have been used to produce effi cient crane runways. Gantrex has the history, experience and capability to fi eld weld using Puddle Arc, Calorite Thermal and Flash-Butt procedures. Below is a short overview of the most common methods:

Puddle Arc:

an electro-slag process used more extensively in Europe where it lends itself to the joining of relatively low carbon"A" rails. It is skill dependent, where weld is puddled into the rail gap and retained by "coppers" matched to the rail profile.
The "coppers" are individually shaped by the welder to match his own "puddling" technique. Puddle Arc Welding can result in a good joint, but success depends on the skill of the welder. It also creates a larger heat-affected zone than thermal or flash-butt rail welding.
Battering can be a problem on higher cycle runways. Larger profiles may take up to 10 hours per weld. Not as commonly used today as the other methods.

Calories Thermal:

a thermal-slag process using a chemical heat source. Rail ends are square cut and sand molds are set on the sides and bottom of the rail. After preheating of the ends, a thermal charge is ignited in a crucible and the molten steel is allowed to fl ow into the cavity.
The railends are joined via a casting during the welding process. This weld is good, affords portability and 4-5 welds can be made by a two man crew in a normal shift.

Flash-Butt:

Technically, the best weld. It produces the smallest heat affected zone, minimizing joint batter and uses electric current and hydraulic rams to butt the rail ends together at the upset temperature.
As many as 4 welds per hour may be possible for overhead runways and 4-6 welds per hour for ground tracks. This system is most effective when the rail is fed from a fixed location and advanced down the runway on rollers. Used on runways where all the rail is replaced.

Aluminothermic Welding:

In aluminothermic welding a refractory sand mould is placed around the two square cut rails ends. The gap between the rail ends is about 20 mm. The rail is preheated to a temperature dependant on the chemical composition of the rail and the precise welding process. A crucible containing a combustible powder, iron and alloying elements is placed above the mould.
The powder is ignited and when it attains the correct temperature, it melts a plug and flows into the mould. On completion of the weld and solidification of the steel the mould is broken away and the runners and risers are removed either manually or by means of a special shearing machine. The cooling and post weld heat treatment of the rail are chosen dependant on the rail material and the application.

Comparison of Aluminothermic and Puddle Arc:

Both the aluminothermic and puddle arc processes are suitable methods for welding most grades of crane rails. The choice of method is normally dependant on local factors.
Puddle arc is cheaper on its use of consumables. Aluminothermic welding is quicker per joint.
As there are normally two men to an aluminothermic welding team, the manpower requirements of the two processes are similar. Thus overall puddle arc is cheaper. In some cases, aluminothermic welding is considered to be potentially too dangerous to be undertaken above ground level.
Puddle Arc is the most economical process for a small number of welds.
The weld metal quality of aluminothermic welds is of high integrity compared with puddle arc welds. However, the performances of the two systems are both adequate as the fracture resistance of puddle arc weld metals is higher than that of aluminothermic.

Flash butt welding:

Flash butt welding is commonly used for railway rail welding in steel mills before shipment. It is also used on site for railway rails. It requires thousands of amps current and hence heavy equipment. The rail ends are heated while in contact and when they are hot enough they are forged together. The process is used for crane rail welding on site in North America but it has not found much application in other parts of the world.

Rail Head Hardening:

There are a number of situations when it can be beneficial to harden the head of the rail. The puddle arc process can tend to leave a soft spot at the rail head in the weld metal and adjacent to it. The design of container crane's boom hinges and rail expansion joints results in the rail being split. This can mean that the crane or trolley wheel load is carried on half the rail head width.
In these cases, the rail head can be hardened by using a welding process.
The material of the head is removed by grinding down to 10, 15 or 20 mm. ideally, the cut is tapered or stepped and spread over 200 to 400 mm of rail. The rail head is then built up with a work hardening welding electrode. This is soft when welded so that it can be ground to the correct profile. After a few passages of crane wheel, it develops the hardness and wear resistance required.

The Puddle Arc or Enclosed Arc Method:

Puddle Arc Welding was developed by Philips Welding, probably in the 1950s. The method was developed as a means for joining any large cross section steel items together. The welding of crane rails became a particular application, which is now a specialist area. In the method, the two rail ends to be joined are cut square and placed about 20 mm apart. The base of the rail at the gap has a copper strip placed beneath it and a mild steel strip of 16mm by 3mm section is placed on the copper. This steel strip prevents the arc of the welding process striking on the copper. The strip is fully melted in the welding process and becomes alloyed with the weld metal. Thus the composition of the strip is not important, providing it does not contain significant impurities.

The welding process uses large diameter electrodes (5mm or 6 mm) and a high current to fill the majority of the gap. The process is to strike the arc on the rail ends and to melt the electrode and rail into a puddle of weld metal, which is covered with liquid slag, derived from the coating on the electrode. As the steel of the rail and characteristics of the flux are both very different from other welding processes, special electrodes have been developed for this process.
While it is possible to use some conventional low hydrogen electrodes for puddle arc welding it is discouraged. The gap between the rail ends is filled in two stages normally. The foot of the rail is first welded. This is done run by run with the slag being chipped off after each run. Following this the remainder of the weld is completed. To prevent the puddle of weld metal and flux from flowing away from the weld, copper mould pieces are placed either side of the weld.
The welding is stopped about 10 mm from the top of the head to allow the rail to cool to the weld preheat temperature. It is continued to above the head of the rail and then it is ground back to form the final running surface for the crane wheel. This pause in the welding allows the upper layer of weld to attain a higher hardness then full annealed material.

The precise procedure for puddle arc welding rails needs to be specified on the basis of the rail steel and the application details. The rail ends must be placed at a small angle to each other (in the vertical plane). This is to allow for distortion due to shrinkage of the weld metal.
The ends of the rails must be pre-heated to a temperature dependant on the carbon content of the steel. Some electrodes are not suitable for some carbon contents. Gantrail can supply draft procedures. The completed weld may need to be cooled under controlled conditions, i.e. insulated with a thermal blanket, depending on rail steel composition.

Puddle arc welds are never perfect. It is normal to entrain some slag and to have a limited degree of lack of fusion or undercut at the bottom. They cannot be inspected easily thus it is wise to agree the quality control standards for production welds before work starts.
The agreed standard should be based on trial welds or past experience.

Gantrail® Crane Rail Welding

Consumables for enclosed arc crane rail welding

Gantrail® promote the use of continuously welded crane rails. This is most important for the efficient and trouble free operation of cranes. Crane rails are typically of high carbon and alloy content and cannot be welded by conventional welding techniques. Thus they must be welded following a qualified procedure by fully trained and qualified welders.
This data sheet gives details of the consumables needed to weld rails and some details of the method. It should be read in conjunction with the relevantprocedures and work instructions.

The benefits for continuously welded rail are considerable but they require the rail to be welded onsite. Typically rails may be welded into lengths of 300 metr or more with no expansion joint.
The rail cross sections are large and the metallurgy; with high carbon and manganese content make welding difficult.
Several methods have been developed that can readily be used. Perhaps the easiest method to set up on a site is enclosed arc, sometimes known as puddle arc welding.
This makes use of manual metal arc equipment and special welding rods.

Consumables Required:

- Railroad electrodes - 3.2 mm for the foot and 5mm or 6mm for the remaining runs.
- Strip in foot of rail to suit rail
- Copper mould for below the rail & for the two sides of the rail(to suit the section being welded.)
- Heat insulating blanket, to be used if required Gantrail.

Product Description:

Railrod is a manual metal arc welding electrode for rail welding utilising basic low hydrogen flux coating with low moisture absorption characteristics. Recovery is about 110% with respect to core wire, 65% with respect to whole electrode.

Specifications:

None strictly applicable, nearest AWS E12016-G and nearest BS EN E69 Z Z B.

ASME IX Qualification:

QW432 F-No -, QW442 A-No -.

Materials To Be Welded:

Rail steels with up to 0.8% carbon and nominal tensile strength of > 700 MPa.

Method:

The rail ends are cut square by sawing. They are set with a gap of approximately 20 mm.
The rails are set at a small camber to form a peak at the weld. This is then corrected with the shrinkage of the liquid weld metal leaving a flat top surface after welding.
A copper strip is placed below the weld metal, this draws excess heat from the weld. This is protected with a small strip of steel, which ultimately becomes absorbed into the weld.
The gap between the rail ends is filled with melted welding electrode. The bottom flange of the rail is welded with a series of passes with the slag being removed after each run.
When this is complete, copper moulds are placed to each side of the rail and a little away from the rail. The gap is then filled with weld metal in a continuous welding process. The slag is allowed to run off the top of the molten metal through the small gap between the copper and the rail.
The weld is continued to above the top surface of the rail by a few mm. Ideally, it should then be allowed to cool slowly with a heat insulating blanket. The correct head profile of the rail is then achieved by grinding.

Applications:

This electrode is especially designed for the butt welding of rails with square preparation. It can also be used for welding similar cross-sections such as bars, thick plates, flanges, etc.
The electrode is specially designed to enable good fusion to the side walls to take place without excessive slag interference. Weld metal has good resistance to collapse under compression by rolling loads.

Micro Structure:

Mainly auto-tempered benedick ferrite.

WELDING GUIDELINES:

Preheat typically 200˚C for > 0.5% C rail steel, increasing to 300˚C for > 0.7% C rail steel.
It is important to maintain these minimum temperatures during welding. Maximum suggested inter pass temperature 400 □ C , Slow cool under insulation after welding.
This electrode is normally used in the down hand (flat) position with a slag-overslag technique. Rail ends are square butt welded by setting 15-20mm apart with a prepared 4-6mm thick steel insert at the weld root, then copper shims are stacked to form an enclosure for the weld pool whilst allowing excess slag to run free. Good surface profile underneath the weld root area will maximize fatigue resistance of the joint. Initial support for depositing the root can utilize a copper backing plate or wire-reinforced window glass. Before and during welding it is important to use a sufficient preheat-interpass range, and to retard cooling.

Composition (weld metal wt %):

—	C	Mn	Si	S	P	Cr	Ni	Mo
min	0.06	0.7	0.2	—	—	2.0	—	—
max	0.12	1.5	0.8	0.020	0.025	2.6	0.5	0.5
type	0.19	1	0.5	0.008	0.012	2.3	0.2	0.2

All-weld Mechanical Properties:

As welded			Typical
Tensile strength	—	MPa	900
0.2% Proof stress	—	MPa	700
Elongation on 4d	—	%	17
Impact energy*	+20˚C	J	18-48
—	0˚C	J	14-43
Hardness	—	HV	280

* **For comparison, typical thermic rail weld:** 8J @ 20˚C, 5J @ 0˚C.

Parameters:

Ø (mm)	3.2	5.0	6.0
min A	100	200	240
max A	160	280	360

Weld Rod Data:

Ø (mm)	3.2*	5.0	6.0*
Length (mm)	380	450	450
kg/carton	15.0	17.7	18.3
pieces/carton	447	187	135

* supplied to order

Packaging And Storage Data:

Three hermetically sealed ring-pull metal tins per carton, with unlimited shelf life. Direct use from tin will give hydrogen < 5ml/100g weld metal during 8h working shift.
For electrodes that have been exposed: Redry 250-300˚C/1-2h to ensure H2 <10ml/100g 300-350˚C/1-2h to ensure H2 < 5ml/100g. (Maximum 420˚C, 3 cycles, 10h total).
Storage of redried electrodes at 100-200˚C in holding oven or 50-150˚C in heated quiver: no limit, but maximum 6 weeks recommended.
Recommended ambient storage conditions for opened tins (using plastic lid): < 60% RH, > 18˚C.

Fume Data:

Fume composition, wt % typical:

Ø (mm)	3.2	5.0	6.0
min A	100	200	240
max A	160	280	360

08

Welding Longitudinal Rails Instruction

دستورالعمل جوشکاری ریل های طولی

Tel: +98 21 66 69 5000
Fax: +98 21 66 62 9067
www.yazdsteel.com
info@yazdsteel.com

دستورالعمل جوشکاری ریل های طولی جرثقیل سقفی و دروازه ای
تیپ A120 , A100 (DIN 536)

تعاریف

PAD: یک لایه الاستومتر که با نوارهای فولادی مقاوم سازی شده است و زیر ریل جرثقیل نصب می گردد.

CERAMIC FIBER PAPER: یک لایه عایق حرارتی کاغذی دارای تحمل حرارتی تا 1260 °C .

۱- مشخصات فنی ریل A120 :

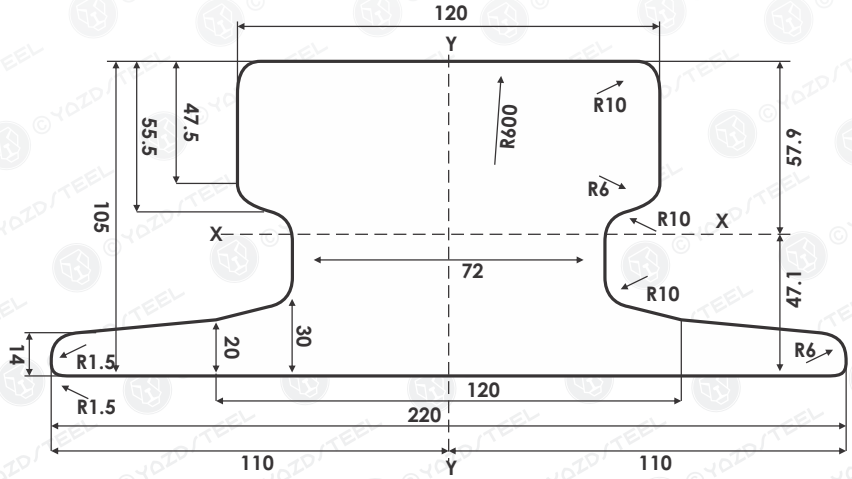

۲- فرآیند جوشکاری

۱- قبل از قرار دادن ریل ها بر روی تیرکرین ، ابتدا تیرکرین بخوبی تمیز شود و محل نشیمنگاه ریل از وجود هرگونه زائده جوشکاری پاک سازی گردد.

۲- برداشت دقیق توسط دوربین نقشه برداری انجام و آکس تیرکرین تعیین و تاییدیه از دستگاه نظارت دریافت گردد.

۳- جهت جلوگیری از سوختن پد در حین فرایند جوشکاری ، پد را پس از اتمام جوشکاری های ریل وکلمپ در زیر ریل نصب نمایید .

٤- ریل ها طبق نقشه جانمایی تایید شده توسط دستگاه نظارت ، در محل خود قرار گیرند .

۵- در نقشه جانمایی ، نقاط جوش ریل بر روی دو محورسالن روبروی هم واقع نشوند و با توجه به آرایش چرخ ها بر روی کلگی ها ، به گونه ای این اختلاف ایجاد گردد که همزمان چرخهای هر دو طرف پل از روی یک نقطه جوش عبور نکنند .

٦- بین انتهای ریل و END STOP نصب شده بر روی تیرکرین ، فاصله مناسب ۱۰۰ الی ۲۰۰ میلیمتر طبق نقشه سازنده جهت انبساط ریل در نظر گرفته شود.

۷- تعدادی گاید (یک قطعه فلز) به تعداد کافی در دو طرف ریل به تیرکرین بطور موقت جوشکاری شود تا ریل از آکس تیرکرین خارج نگردد :

۸-قبل از جوشکاری نقاط junction ، ریل ها با استفاده از قطعات ساخته شده فلزی (ورق ضخیم به شکل هفت تیر) بطور موقت به تیرکرین جوشکاری و مهار شوند.

لازم به ذکر است که در صورت محکم نبودن و یا کافی نبودن نقاط مهار ، پس از شروع جوشکاری در اثر نیروی بسیار زیاد جوش ، ریل ها از جای خود بلند خواهند شد و تنظیمات انجام شده بهم خواهد ریخت.

۹- پس از بازدید گروه نظارت و دریافت تاییدیه ، نقاط junction طبق شرح ذیل به یکدیگر جوشکاری گردند.

۱۰- برای جوشکاری نقاط junction ریل ، ورق مسی با ابعاد ۸×۸۰×۲۴۰ میلیمتر را در محل جوش در زیر دو سر ریل قرار دهید و پس از پایان کار و سرد شدن جوش ، ورق مسی را خارج نمایید .

۱۱- هر دو ریل باید در کف و در دو طرفین کاملا هم راستا باشند ولی در قسمت سطح رویی باید مطابق با شکل ۱ ، یک گرده (PEAK) ایجاد شود .

برای ایجاد این گرده ، زیر دو سر ریل ها تا حدی بالا برده شود که با استفاده از یک خط کش فلزی ۲متری با اندازه ۴میلیمتر برای ریل A120 در یکی از لبه های خط کش فاصله ایجاد گردد.

لازم به ذکر است ، برای ریل A100 این فاصله باید با اندازه ۵ میلیمتر تنظیم گردد.

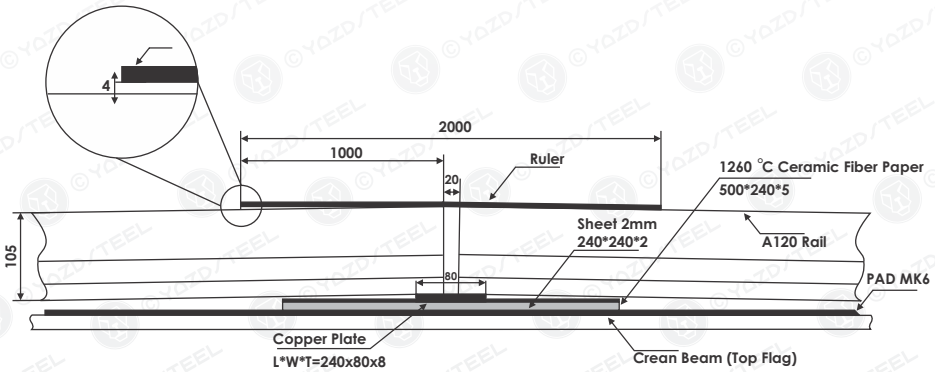

Figure 01

۱۲- فاصله درز جوش در شکل ۱ برای ریل A120= 20 mm و برای ریل A100= 18 mm تنظیم گردد.

۱۳- فاصله ایجاد شده در لبه خط کش برای ریل A120= 4 mm و برای ریل A100 = 5 mm تنظیم گردد.

۱۴- قبل از شروع جوشکاری ، عملیات پیشگرم دو سر ریل تا فاصله حداقل ۱۵۰ میلیمتری طبق WPS انجام شود ، برای جوش پاشنه و قسمت جان ریل و ۱۵ میلیمتر مانده به سطح فوقانی تاج ریل از E7018 G و برای ۱۵ میلیمتر انتهای تاج ریل از E9018 G و یا از E 106 OERLIKON استفاده شده است .

۱۵- پیشگرم الکترود جوشکاری در داخل آون جوشکاری و طبق WPS انجام شود .

۱۶- جوشکاری مرحله اول در فلنج نشیمنگاه ریل : جوشکاری را با الکترود قید شده در دستورکار ابلاغی آغاز کنید و به یک طرف فلنج نشیمنگاه ریل ، یک پاس جوش بدهید و در انتها گل جوشکاری را برداشته ومحل جوشکاری را تمیز کنید

به فلنج نشیمنگاه ریل مقابل نیز یک پاس جوش بدهید و در انتها گل جوشکاری را برداشته ومحل جوشکاری را تمیز کنید ،جوشکاری پاس به پاس ادامه پیدا کند تا در نهایت کف نشیمنگاه دو ریل کاملا به همدیگر جوش داده شود .

پس از برداشتن گل جوش و تمیزکاری ، قسمت فلنج نشیمنگاه ریل ها را بطور کامل جوشکاری نمایید.

۱۷- جوشکاری مرحله دوم قسمت جان ریل : پس از تمیزکاری جوشکاری مرحله اول فلنج نشیمنگاه ریل دو عدد قالب مسی در دو طرف محل جوشکاری ریل نصب کنید و فاصله هوایی ۳ الی ۵ میلیمتر با بدنه ریل جهت تخلیه سرباره مذاب ایجاد کنید.

۱۸-جوشکاری مرحله دوم را شروع و بصورت مداوم تا پر شدن فاصله ۲۰ میلیمتری درز جوش دو ریل A120 و ۱۵ میلیمتری مانده به سطح تاج ریل ادامه دهید.
(فاصله درز جوش برای ریل A120= 20 mm و برای ریل A100= 18 mm است) .

۱۹- بدون توقف در عملیات جوشکاری ، الکترود را تعویض و در فاصله ۱۵ میلیمتری تاج ریل ، از الکترود قید شده در دستورکارابلاغی استفاده کنید و جوشکاری را تا ۲ میلیمتر بالاتر از سطح ریل ادامه دهید.

۲۰- در صورتیکه به هر دلیلی در حین فرایند جوشکاری وقفه ای ایجاد شد و سرباره جوش سرد شد ، باید قبل از ادامه ، حتما گل جوش برداشته شود و در صورت سرد شدن نقطه جوش ، مجددا پیشگرم انجام شود.

۲۱- پیش بینی لازم جهت قطع نشدن عملیات جوشکاری نظیر آماده بکار بودن ۲ دستگاه جوش ، موجود بودن ۲ انبر جوشکاری ، نیروی کمکی لازم و غیره انجام شود .

۲۲- پس از پایان عملیات جوشکاری ، محل جوش را با heat insulating blanket به خوبی بپوشانید تا جوش به آهستگی سرد شود.

۲۳- پس از سرد شدن جوش ، سطح فوقانی و دو سطح جانبی ریل را سنگ زنی کنید و سنگ زنی سایر قسمت ها در حد تمیزکاری انجام شود ، در محل جوشکاری شده در هنگام سنگ زنی نباید گودی ایجاد شود . با قرار دادن یک خط کش فلزی و یا یک شابلون ، مقدار سنگ زنی را کنترل کنید .

۲۴- پس از اتمام سنگ زنی و دریافت تایید جوش نقاط junction ریل طولی از واحد نظارت (تایید تست UT) ، محل جوشکاری قسمت تحتانی کلمپ ریل را تعیین نموده و قبل از جوشکاری ، رنگ روی تیر کرین را در محل تعیین شده با سنگ زنی تمیز کنید .

۲۵- با قرار دادن یک شابلون با ضخامت مورد نیاز ، فاصله تعیین شده در دستورالعمل سازه کلمپ ریل را نسبت به لبه فلنج ریل تنظیم (برای کلمپ ساخت یزد استیل با کد 9220/18/40 این فاصله ۱۱ میلیمتر است) و قسمت تحتانی کلمپ را به تیر کرین بصورت تک خال جوشکاری نمایید .
قسمت تحتانی کلمپ ساخت یزد استیل از جنس AISI1030=CK30 می باشد و باید با الکترود E7018G طبق نقشه و دستورالعمل سازنده کلمپ جوشکاری گردد.

۲۶- پس از دریافت تایید از دستگاه نظارت مبنی بر صحیح بودن موقعیت کلمپ ها ، نسبت به تکمیل جوش نقاط تعیین شده در دستورالعمل سازنده کلمپ اقدام کنید.

۲۷- پس از دریافت تایید از دستگاه نظارت مبنی بر تکمیل جوش قسمت تحتانی کلمپ ریل (تایید تست PT) ، نسبت به تمیزکاری تیرکرین و جمع آوری کلیه ضایعات جوشکاری (قلم جوش ، صفحه سنگ و غیره) اقدام کنید .

۲۸- برای قرار دادن پد در زیر ریل ، با استفاده از دو عدد خرک و دو عدد چین بلاک ، قسمتی از ریل را از روی تیرکرین بلند نمایید و پس از تمیزکاری مجدد زیر نشیمنگاه ریل (قبل از قرار دادن PAD باید سطح تیرکرین عاری از ضایعات جوش ، گریس ، روغن ، چربی و هرگونه آلودگی و قطعات تیز و برنده گردد) ، شاخه های پد ۱۲ متری را در زیر ریل نصب کنید و بگونه ای که ریل از گاید های فلزی نصب شده و از آکس تیرکرین خارج نگردد ، آنرا در محل قبلی خود قرار دهید .
توجه: در زمان تمیزکاری زیر ریل از گیره مطمئن استفاده کنید و پس از بلندکردن ریل ، چند عدد فلز محکم زیر ریل قرار دهید تا در زمان تمیزکاری ، خطر سقوط ریل را از بین ببرید. هرگز دست خود را زیر ریل نبرید و با هوای فشرده زیر ریل را تمیز کنید.
پس از تمیزکاری ، قطعات گذاشته شده زیر ریل را بردارید و سپس پد را در زیر ریل قرار دهید.

۲۹-برای اتصال سر به سر دو PAD از طرح زیر به شکل مربعی استفاده کنید و دو سر PAD را بصورت نری و مادگی در یکدیگر قفل نمایید.

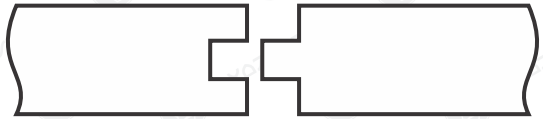

۳۰- محل اتصال دو PAD از نقطه درز جوش ریل ، محل قرارگرفتن دو تیرکرین مجاور بر روی یک ستون و همچنین نقطه ژوئن سالن ، حداقل یک مترفاصله داشته باشد.

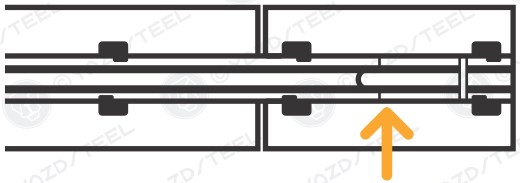

۳۱- حداقل طول PAD از ۳ برابر فاصله بین دو عدد کلمپ ریل کمتر نباشد.

۳۲-در انتهای هر Runway باید PAD Stop مناسب (ورق با ضخامت ۵ میلیمتر و عرض ۱۰۰ میلیمتر و طول ۵۰ میلیمتر بیشتر از پهنای نشیمنگاه ریل) جهت جلوگیری از خارج شدن PAD از زیر ریل بصورت تک خال بر روی تیرکرین جوشکاری شود.

۳۳- پس از تکمیل پد گذاری زیر ریل ، قسمت فوقانی کلمپ ریل را نصب نمایید .

۳۴- قسمت فوقانی کلمپ ریل باید کاملا بر روی قسمت تحتانی بنشیند و پیچ ها تا حدودی محکم شوند و پس از ضربه زدن با چکش در جهت ۴۵ درجه به قسمت فوقانی کلمپ و تماس لبه فلزی قسمت فوقانی کلمپ (پیشانی کلمپ) با لبه فلنج نشیمنگاه ریل ، پیچ های کلمپ با ترکمتر تا حد TIGHTENING TORQUE قید شده در دستورالعمل سازنده محکم شوند.

(برای کلمپ ساخت یزد استیل با کد 9220/18/40 مقدار TIGHTENING TORQUE = 250 NM)

۳۵- برای جلوگیری از سوختن PAD ، حتی الامکان جوشکاری روی PAD انجام نشود .

۳۶- برای جوشکاری در محل هایی که PAD وجود دارد ، دو سر ریل را بلند کنید و صفحه عایق Ceramic Fiber Paper 1260 °C با ابعاد ۵×۲۴۰×۵۰۰ میلیمتر را برای محافظت روی PAD قرار دهید و برای محافظت از صفحه عایق Ceramic Fiber Paper در برابر سرباره های جوش ، یک ورق فولادی با ابعاد ۲×۲۴۰×۲۴۰ میلیمتر روی صفحه عایق و زیر صفحه مسی قرار دهید.

۳۷- در صورت نیاز به تعمیر (Repair) نقطه اتصال جوشکاری شده دو ریل ، برای محافظت PAD در برابر حرارت درحین عملیات پیشگرم و همچنین حرارت ایجاد شده از جوشکاری تعمیراتی ، باید ابتدا پیچ های تعدادی از کلمپ های اطراف نقطه مورد نظر باز شوند و ریل کمی از روی PAD بلند شود و بین ریل و PAD یک صفحه عایق میکا با ضخامت ۴ میلیمتر و پهنای ۲۵۰ میلیمتر و طول ۲۵۰ میلیمتر قرار داده شود .

در بند ۱۶ و ۱۹ به دلایل زیر به نوع الکترود جوشکاری اشاره نشده است :

۱- ریل ها دارای گرید های مختلفی هستند و METAL ANALYSIS و MECHANICAL PROPERTIES ریل و الکترود باید بررسی گردد.

۲-الکترود باید توسط کارشناس جوش و با بررسی مورد فوق انتخاب و WPSتهیه گردد.

۳- باید از الکترودی استفاده شود که در مقابل فشار ناشی از چرخهای جرثقیل مقاومت خوبی داشته باشد .

۴- شرکت GANTRAIL برای جوشکاری ریل جرثقیل الکترود با نام RAILROAD را پیشنهاد داده است که این الکترود تقریبا معادل E12016Gو BS EN E69ZZB میباشد.

در بعضی از پروژه ها برای جوش پاشنه و قسمت جان ریل و ۱۵ میلیمتر مانده به سطح فوقانی تاج ریل از E7018 G و برای ۱۵ میلیمتر انتهای تاج ریل از E9018 G و یا از E 106 OERLIKON استفاده شده است .

مراجع :

۱- Crane Rail Welding/ET/09/14

۲- DIN536 Crane Rail Gantrail

با تشکر از شرکت مهرفام سپاهان نمایندگی شرکت جرثقیل سازی JASO اسپانیا













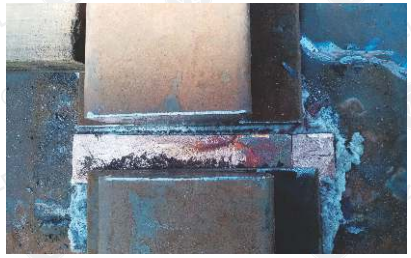

آمـاده سـازی و جـوشـکـاری ریـل

yazdsteelco
ما را در شبکه اینستاگرام دنبال کنید

فولاد مبارکه اصفهان
Mobarakeh Steel Co.

شرکت ذوب آهن اصفهان
ESCO

شرکت فولاد خوزستان
Khouzestan Steel Co.

شرکت فولاد اکسین خوزستان
OXIN STEEL

مجتمع فولاد گیلان
Ferro Gilan Complex

شرکت فولاد آلیاژی پاسارگاد
PASCO

شرکت آهن فولاد ارفع
ARFA STEEL Co.

مجتمع ذوب و نورد کرمان
KSRC

شرکت فولاد آلیاژی ایران
IRAN ALLOY STEEL

گروه ملی صنتی فولاد ایران
REFICO

شرکت سنگ آهن مرکزی
ICIOC

شرکت فولاد سیرجان ایرانیان
SISCO

شرکت فولاد هرمزگان
HOSCO

شرکت نورد و فولاد یزد
Yazd Rolling Mill Co.

شرکت تولیدی فولاد سپید فراب کویر
KAVIR STEEL

شرکت ملی صنایع مس ایران
NICICO

شرکت مهندسی مپنا
MAPNA GROUP

شرکت تام ایران خودرو
TAM Iran Khodro Co.

قرارگاه سازندگی خاتم الانبیاء
Khatam-ol Anbia Construction

شرکت احداث صنایع و معادن سرزمین پارس
PAMIDCO

شرکت مهنسی فن آور معادن و فلزات
MMTE

شرکت ورق خودرو چهارمحال بختیاری
CBASCO

شرکت مهندسی بین المللی ایران ایریتک
IRITEC

شرکت آسفالت طوس
ASFALT TOUS CO.

شرکت بازرگانی و بین المللی طوسا
TOOOSACO

شرکت مهندسی فکور صنعت تهران
FSTCO

شرکت صنایع آلومینیوم جنوب
SALCO

شرکت مهندسی روشن صنعت
ROWSHAN SANAAT

شرکت فراورده های دیرگداز ایران
IREPCO

شرکت فولاد ظفر بناب
ZAFAR STEEL

مجتمع چادر ملو
Chadormalu Mining & Industrial Co.

شرکت آلومینوم ایران
IRALCO

شرکت سازه های فلزی و جرقیل فسان
FSSANCO

شرکت فرا تدبیر دماوند ایرانیان
Fara tadbir damavand Co.

شرکت مهندسی فیروزا
FIROOZACRANE

شرکت تیتان صنعت پیشگام
TITAN SANAT

شرکت جرثقیل پولاد
POOLAD CRANE

شرکت آوا صنعت مهر چهلستون
AVASANATCO

شرکت فنی مهندسی برق آرا
BARGH ARA

شرکت سیمان شمال
Shomal Cement Co.

شرکت سیمان دشتستان
DASHTESTAN CEMENT

شرکت سیمان شاهرود
SHAHROUD CEMENT

شرکت سیمان لامرد
LAMERD CEMENT

شرکت سیمان تهران
TEHRAN CEMENT

شرکت سیمان یاسوج
YASOUJ CEMENT

شرکت نورد و لوله اهواز
ARPCO STEEL

شرکت فولاد کاوه جنوب کیش
SKSCO

صنایع فولاد تیکمه داش
SFKSTCO

فولاد آتیه خاورمیانه
Atieh khavarmiyaneh Steel (AKS)

شرکت صنعت پردیس آذربایجان
PARDISSTEEL

فولاد تکنیک
FOOLAD TECHNIC

شرکت سازه های صنعتی آذران
AZARANIND

شرکت نورد و تولید قطعات فولادی
Rolling and Steel Production

مجتمع فولاد البرز ناب آرش
ANASTEELCO

شرکت گسترش و نوسازی معادن خاورمیانه
MEMRADCO

شرکت لوله و تجهیزات سدید
SADID PIPE

کاوه فولاد آریا
Kaveh Foolad Aria Co.

شرکت کیسون
KAYSON Inc.

کربن صنعت امیرکبیر
CARBON SANAT AMIRKABIR

شرکت مهندسی زانکو خاور
ZANKOCO

شرکت فولاد غرب آسیا
WASCO

شرکت صنایع هفت الماس
SEVEN DIAMONDS

مجتمع تولیدی و صنعتی شمش انزلی
SHEMSHANZALI

شرکت صنایع فولاد مشیز بردسیر
MASHIZ STEEL

شرکت نورد فولاد زرین شهرکرد
ATIEHFOULAD

شرکت کاشی و سرامیک الوند
Alvand Tile & Ceramic Industries

شرکت آذر فولاد امین
AFASTEEL

شرکت دنا فولاد زاگرس
DENA FOULAD ZAGROS

شرکت مهندسی و ساختمانی جهان پارس
JAHAN PARS

شرکت فولاد آناهیتا
ANAHITASTEEL

جهش صنعت سازه
JAHESH SANAT SAZEH

تولیدی چدن سازان
CSROLL

نظم آوران صنعت و معدن گل گهر
NAZMAVARAN Co.

مهرگان فولاد سهیل یزد
MEHRGAN FOULAD

کاشی و سرامیک سالار نایین
NAEEN SALAR TILE IND

شرکت سیمان کردستان
KOURDESTAN CEMENT

شرکت سیمان آبیک
ABYEK CEMENT

شرکت سیمان دورود
DCEMENTCO

مجتمع تولیدی آهن اسفنجی
ISATIS SPONGE

مجتمع ذوب آهن درفک شمال
Dorfak Shomal Steel Complex

شرکت فولاد سفید دشت چهارمحال بختیاری
SDSTEEL

شرکت حامی آلیاژ آسیا (حامیران)
HAMIRAN STEEL

شرکت صنعت فولاد آلیاژی اصفهان
Isfahan Alloy Steel Complex

شرکت نورد زرین گالوانیزه کاشان
ZARINKASHAN

شرکت مشیران
MOSHIRAN

ایده آل شمش کویر
IDEAL STEEL KAVIR Co.

مجتمع فولاد آذرخش کویر اردکان
Azarakhsh Steel Co.

حدید پویا توسن سمنگان
HPTS

گروه صنعتی پارس بوتیل یزد
PARSBUTYL

فولاد زاگرس ایران
ZAGROS FOULAD

Gantrail
A world of crane rail expertise

GANTREX
ON TRACK WITH YOU

ArcelorMittal

kardemir
steel world wide

LOSAL
Laminados LOSAL. S.A.

VALENTE SPA

PATRY

ÖZKAN

وزارت راه و شهرسازی
راه آهن جمهوری اسلامی ایران
اداره کل روابط عمومی

«کنید در میزان مسئولیت ها نشانی است کسب رضای حق و خدمت به مردم است»

مدیرعامل محترم شرکت یزد استیل
جناب آقای سید محسن حسینی
سلام علیکم

صنعت حمل و نقل ریلی به عنوان یکی از مهمترین بخش های زیربنایی نقش مهمی در رشد اقتصادی و اجتماعی هر جامعه ایفا می کند.

در واقع توسعه بخش های مهم اقتصادی صنعتی و گشایش بدون گسترش و ارتقاء زیرساخت های حمل و نقل امکان پذیر نمی باشد. نگاهی به اهداف و برنامه های کشور درسند چشم انداز بیست ساله و جهت گیری برنامه پنج ساله توسعه اقتصادی اجتماعی و فرهنگی کشور به خوبی نمایانگر ضرورت توسعه حمل و نقل به ویژه حمل و نقل ریلی است.

بی گمان نمایشگاه صنعت راه آهن فرصتی مغتنم جهت هم اندیشی بخش های مختلف و مرتبط با صنعت حمل و نقل ریلی است و نقش مهمی درمعرفی توانمندیها و ظرفیت های حمل و نقل ریلی ایفا میکند.

بدینوسیله از تلاش و کوشش ارزنده و مجدانه جنابعالی که در زمینه مشارکت اعتلای صنعت ریلی کشور در دومین نمایشگاه بین المللی حمل و نقل ریلی و قطارهای شهری داشته اید تشکر و قدردانی نموده توفیقات جنابعالی را برای خدمتگزاری به نظام مقدس جمهوری اسلامی ایران و کلیه زحمتکشان عرصه ریلی کشور ازخداوند متعال خواستارم.

مهدی حاجیان
مدیر کل روابط عمومی

REGISTRATION
CERTIFICATE

This Certificate Confirms that the Management Systems of

Yazd Steel Co.

No.156, 1st Floor, Block A/G, 17th Shahrivar Trading Complex, Metal Trading Center, Shadabad, Tehran, Iran.

Yazdsteel

Have Been Audited and Approved by
Qual Assess Ltd

To the Following Standards or Guidelines:

BS EN ISO 9001:2008
Quality Management Systems

The Approved Management Systems Apply to the Following Scope

Manufacturer All Kinds of Rail Accessories (Clamps) and Pads.

Original Approval: 26 Jan 2015
Re-Assessment Date: 26 Jan 2016
Certificate Expiry: 26 Jan 2020
Certificate Number: 20770884

Quay Quality

NACI

On behalf of Qual Assess Ltd

REGISTRATION CERTIFICATE

QUAY AUDIT LIMITED

Registration Certificate

This document certifies that the quality administration systems of

Yazd Sazeh Steel Company

No.156, Block A/G, 17 Shahrivar Trading Complex, Metal Trading Center, Shad Abad, Tehran, Iran

Have been assessed and approved by

Quay Audit Limited

To the following Quality management systems, standards and guidelines:-

BS EN ISO 9001: 2008

The Approved quality administration systems apply to the following:-

Consultancy and Supplying of Steel Rails and Producing of Rail Fixing.

Original Approval: 17 th Aug 2010
Current Certificate: 17 th Aug 2011
Certificate Expiry: 16 th Aug 2013
Certificate Number: 4116783

railcenter

P. Williams
On behalf of Quay Audit Limited

Ente Certificazione Macchine

CERTIFICATE
OF
COMPLIANCE

CERTIFICATE NR. M111213/YSS913

MANUFACTURER:	
NAME	YAZD SAZEH STEEL
ADDRESS	UNIT 156, 1ST FLOOR BLOCK A - G, 17 SHAHRIVAR TRADING COMPLEX, METAL MARKETING CENTER - SHADABAD, TEHRAN, IRAN

WE CERTIFY THE FOLLOWING PRODUCT(S):

PRODUCT	ALL KIND OF RAIL FIXING (CLIPS & CLAMPS); RAIL PAD
MODEL/S	WELDABLE AND BOLTABLE CLAMP (MK6 & MK2) PAD
YEAR	2011

REMARK:
THIS DOCUMENT HAS BEEN ISSUED UPON A REVIEW OF THE DATASHEETS AND OF THE TECHNICAL CONSTRUCTION FILE. THE APPARATUS IS CONSIDERED TO MEET THE REQUIREMENTS OF THE BELOW STANDARDS, THEREFORE TO FULFIL THE REQUIREMENTS OF THE BELOW LISTED DIRECTIVES.

2008/57/EC	INTEROPERABILITY OF THE RAIL SYSTEM WITHIN THE COMMUNITY DIRECTIVE
	SAFETY STANDARDS EN NORMS: BS 466 APPF, DIN 15070, DIN 536

THIS DOCUMENT IS ONLY VALID FOR THE EQUIPMENT AND CONFIGURATION DESCRIBED AND IN CONJUNCTION WITH THE TEST DATA DETAILED ABOVE. NEVERTHELESS THE MANUFACTURER IS NOT EXEMPTED TO PERFORM ALL THE NECESSARY ACTIVITIES BEFORE ISSUING THE DECLARATION OF CONFORMITY. IN CASE THE APPLIANCE IS MODIFIED OR THE APPLIANCE WILL BE EQUIPPED WITH ACCESSORIES NOT SPECIFIED IN THE MANUFACTURER OPERATOR MANUAL, IT IS RECOMMENDED TO GET IN TOUCH WITH ENTE CERTIFICAZIONE MACCHINE FOR EC VALIDITY EXTENSION.

DATE OF ISSUE DECEMBER 2011

AREA MANAGER
LUCA BEGONI

CE 1282

GENERAL MANAGER
ALESSIO BEGONI

YAZD/TEEL